May 26, 1970 J. A. RUSSELL ET AL 3,513,707

GOLF GAME COMPUTING SYSTEM

Filed Oct. 24, 1966 17 Sheets-Sheet 1

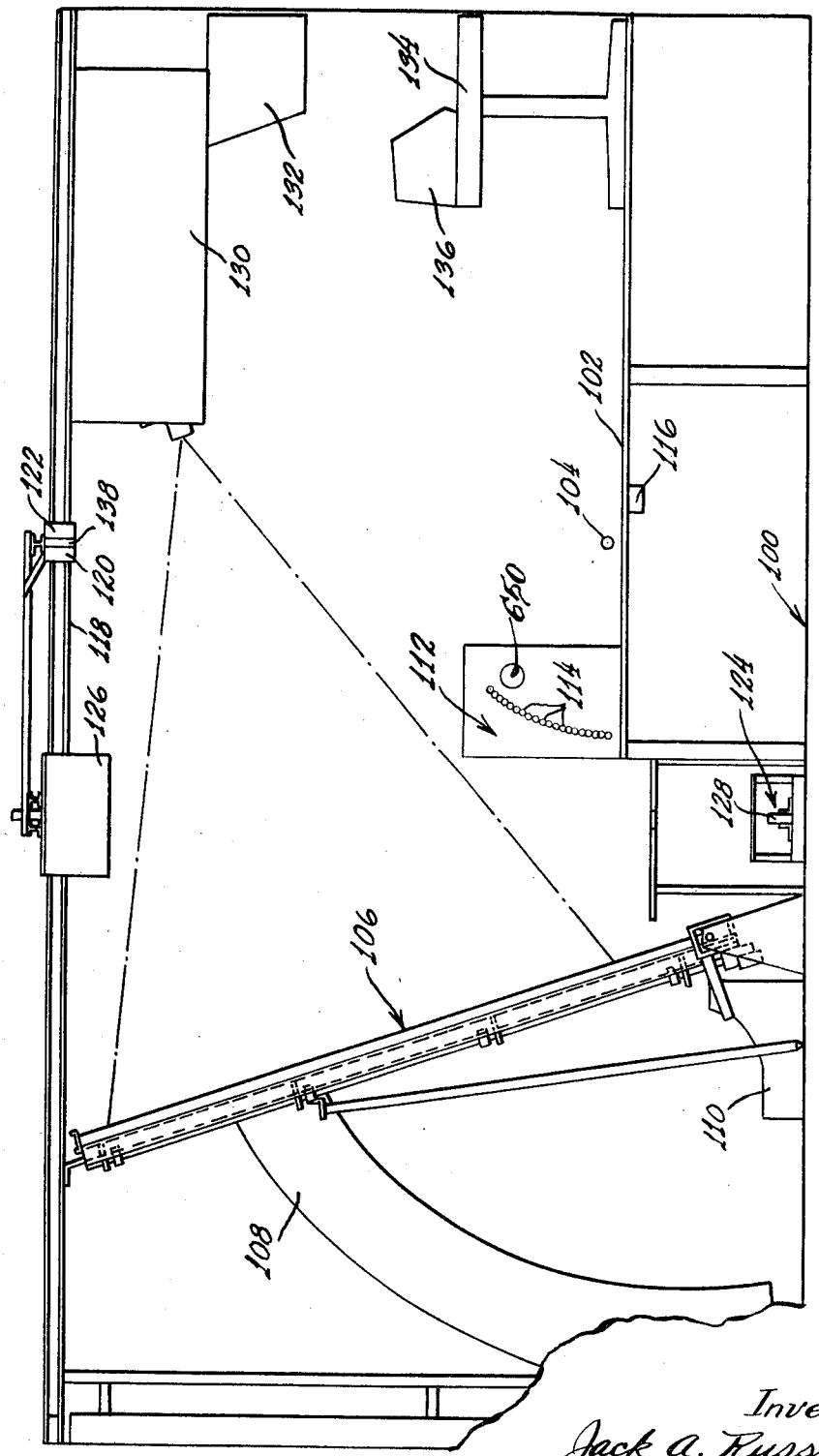

Fig. 1

Inventors:
Jack A. Russell
Bradford J. Baldwin
By
Hofgren, Wegner
Allen, Stellman & McCord
Attys

GOLF GAME COMPUTING SYSTEM

Filed Oct. 24, 1966 17 Sheets-Sheet 2

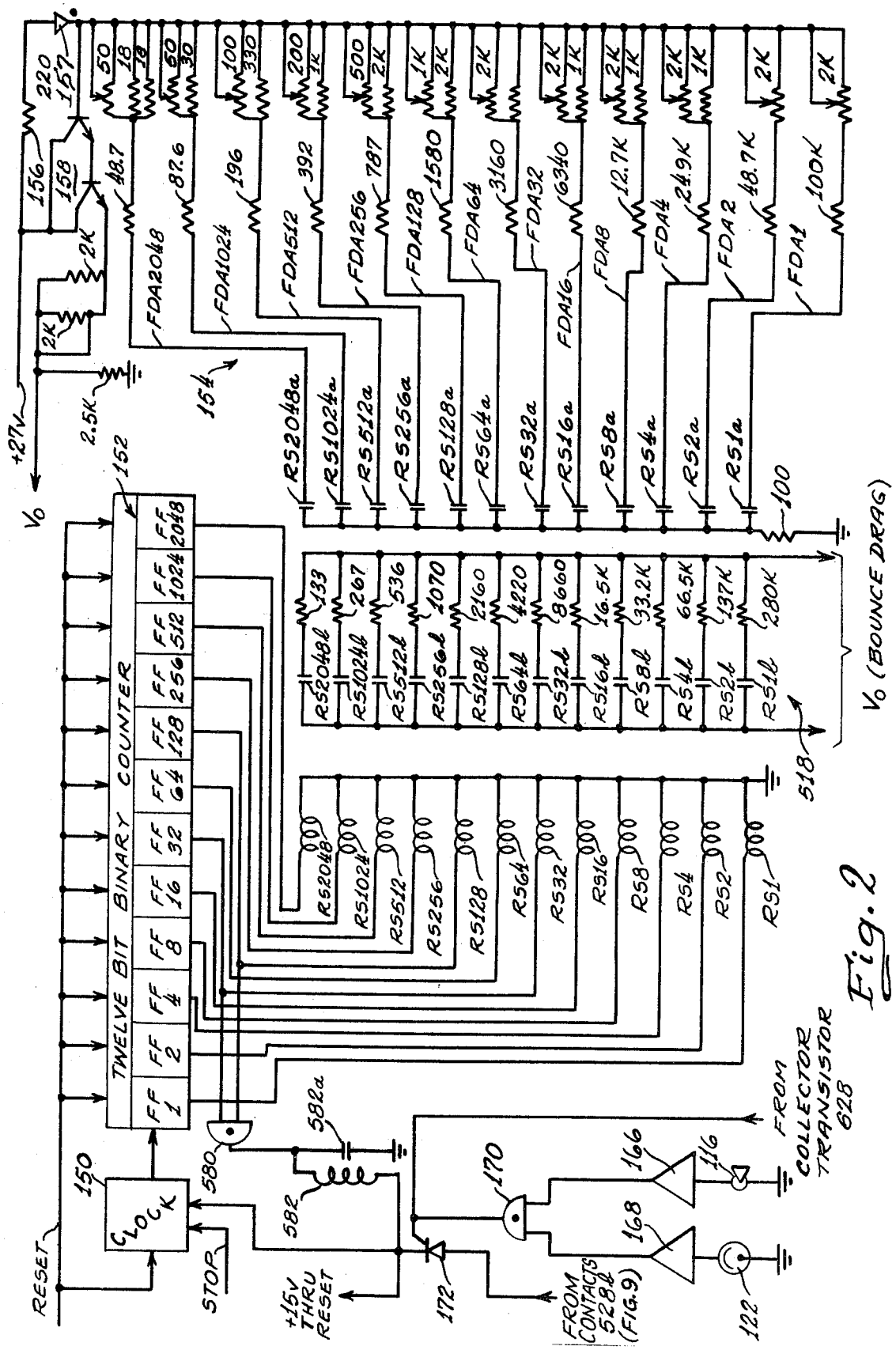

Fig. 2

GOLF GAME COMPUTING SYSTEM

Filed Oct. 24, 1966 17 Sheets-Sheet 3

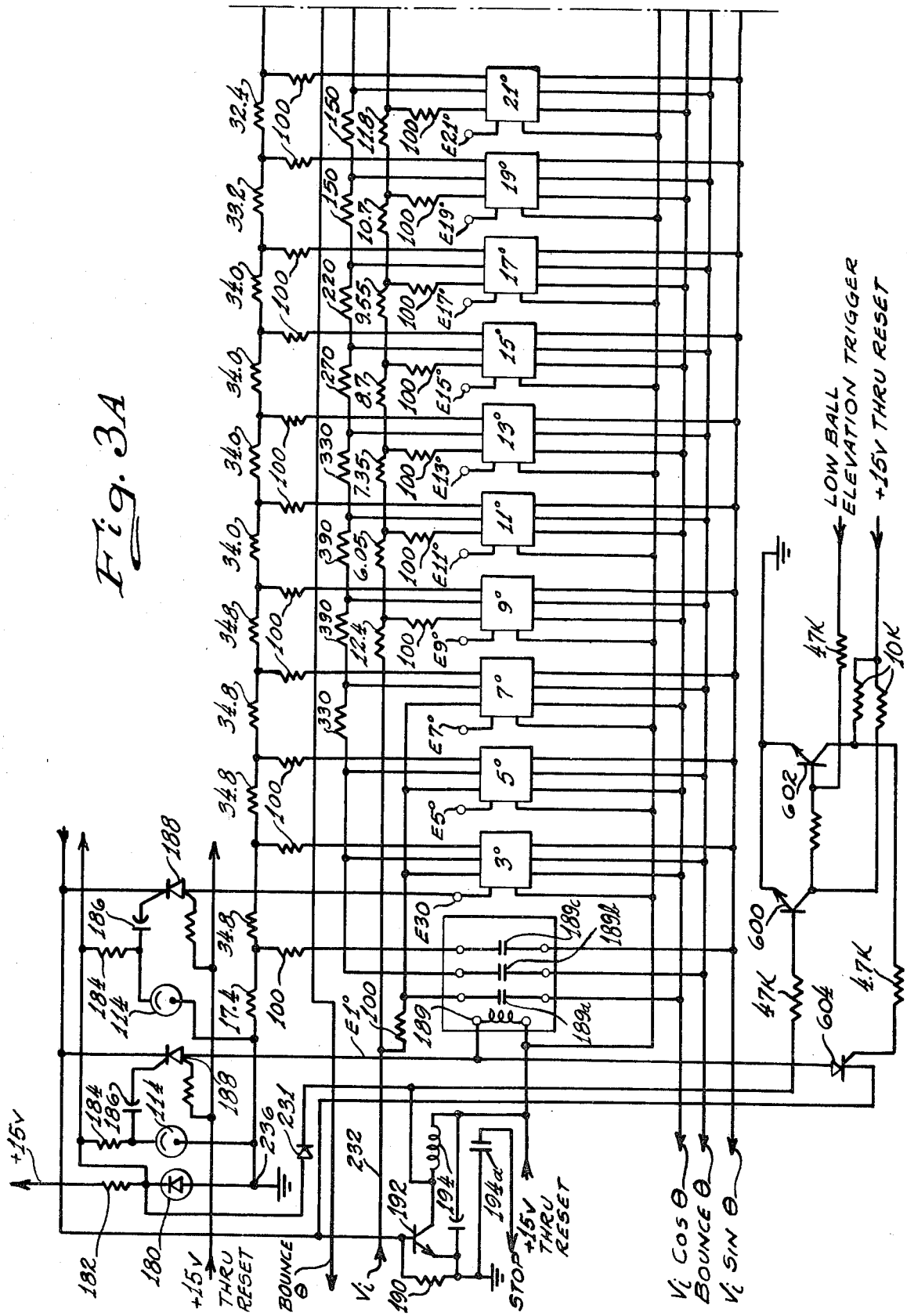

Fig. 3A

Fig. 5B

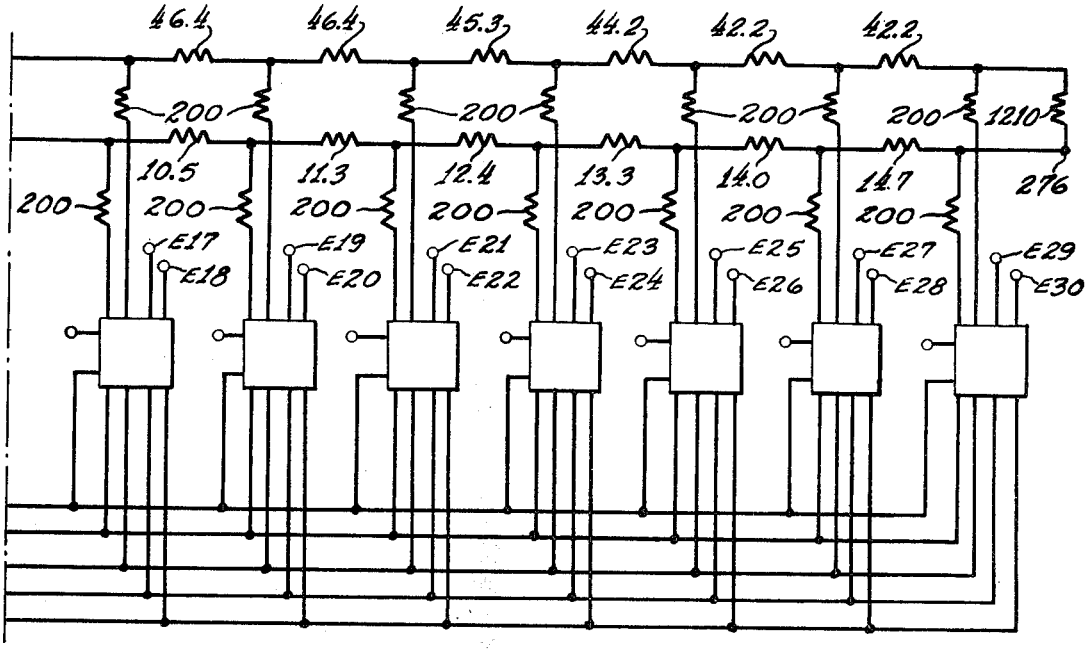
46.4
46.4
45.3
44.2
42.2
42.2
200
200
200
200
1210
10.5
11.3
12.4
13.3
14.0
14.7
276
200
200
200
200
200
200
200
E17
E18
E19
E20
E21
E22
E23
E24
E25
E26
E27
E28
E29
E30

Fig. 3B

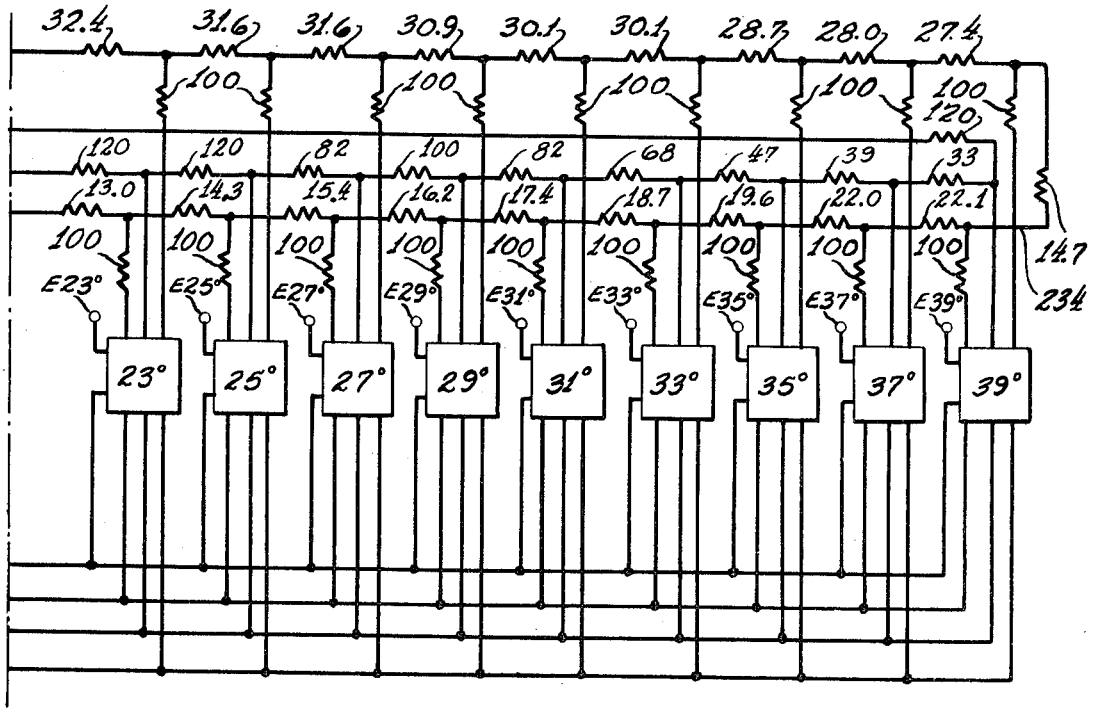
32.4
31.6
31.6
30.9
30.1
30.1
28.7
28.0
27.4
100
100
100
100
100
120
120
120
82
100
82
68
47
39
33
13.0
14.3
15.4
16.2
17.4
18.7
19.6
22.0
22.1
100
100
100
100
100
100
100
100
100
14.7
234
E23°
E25°
E27°
E29°
E31°
E33°
E35°
E37°
E39°
23°
25°
27°
29°
31°
33°
35°
37°
39°

May 26, 1970 J. A. RUSSELL ET AL 3,513,707

GOLF GAME COMPUTING SYSTEM

Filed Oct. 24, 1966 17 Sheets-Sheet 5

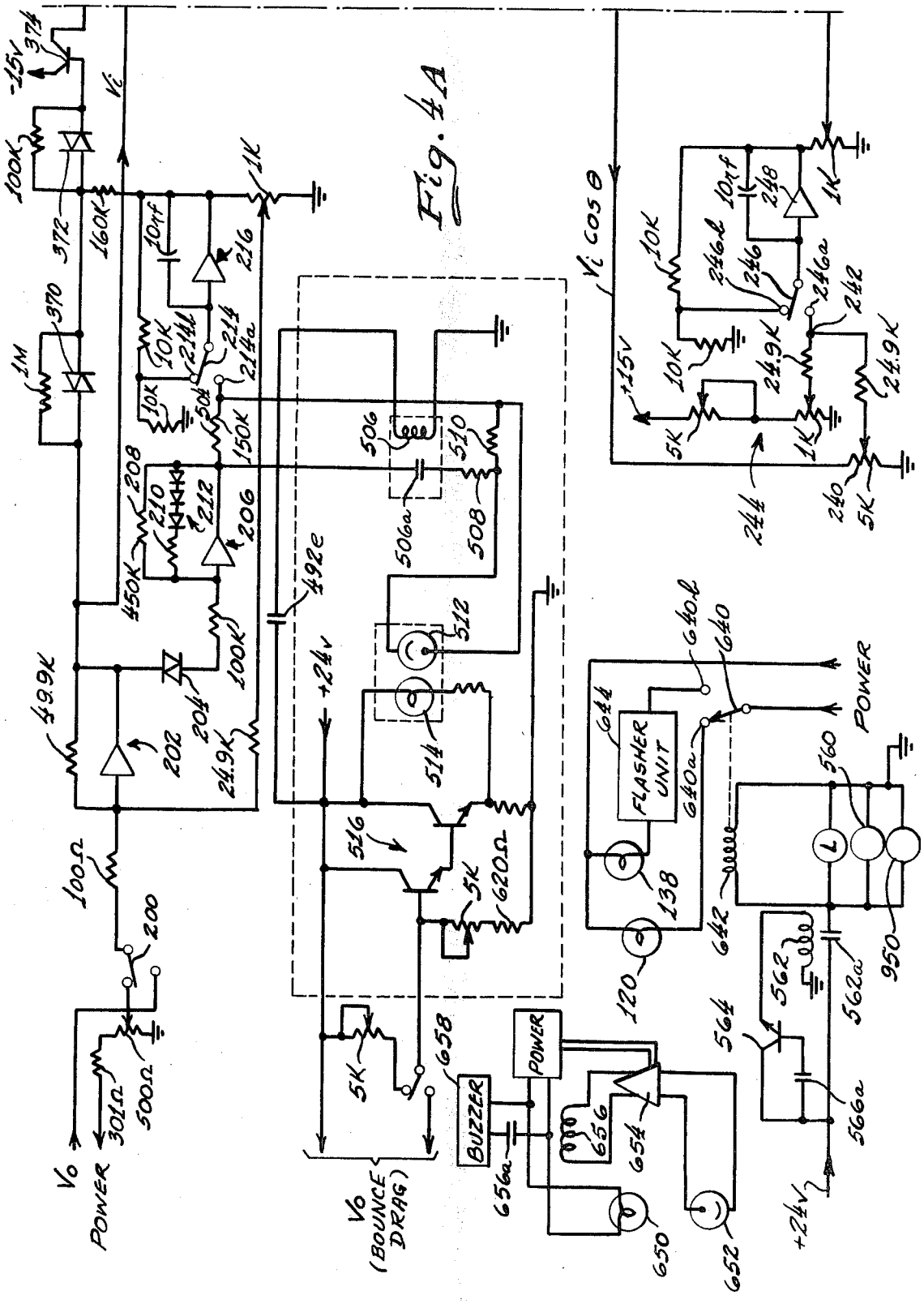

Fig. 4A

GOLF GAME COMPUTING SYSTEM

Filed Oct. 24, 1966

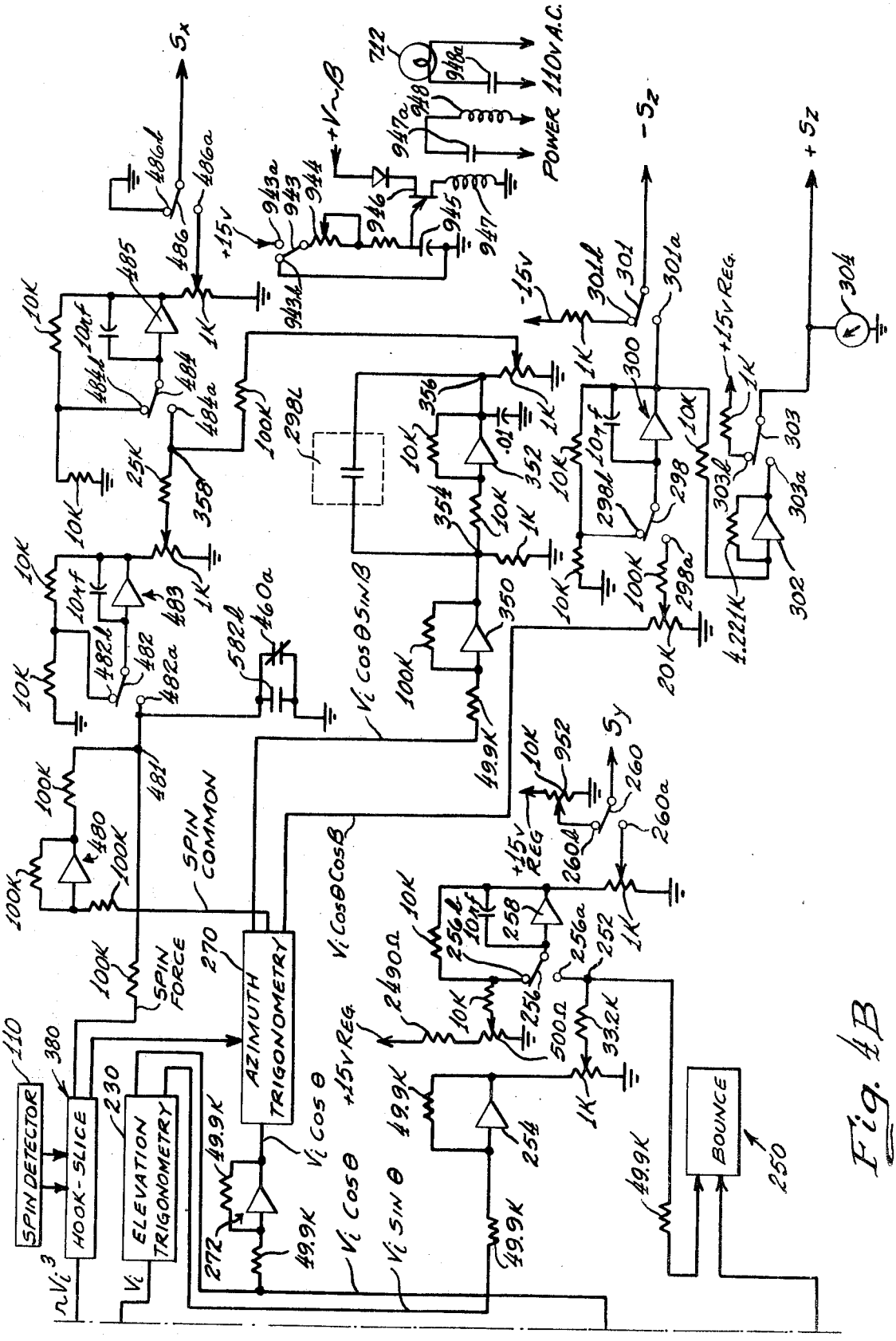

Fig. 4B

GOLF GAME COMPUTING SYSTEM

Filed Oct. 24, 1966 17 Sheets-Sheet 7

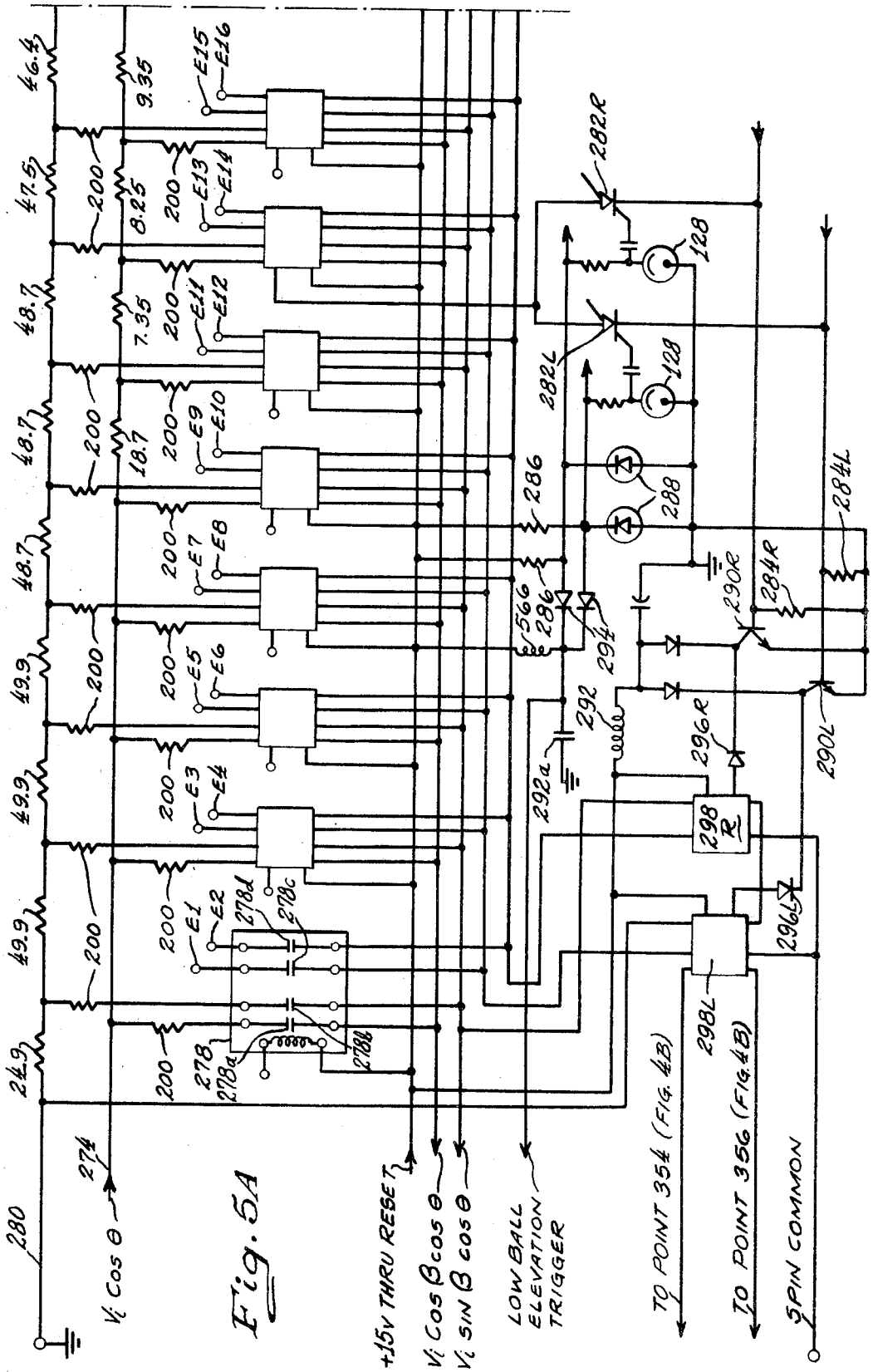

May 26, 1970 J. A. RUSSELL ET AL 3,513,707

GOLF GAME COMPUTING SYSTEM

Filed Oct. 24, 1966 17 Sheets-Sheet 8

Fig. 6

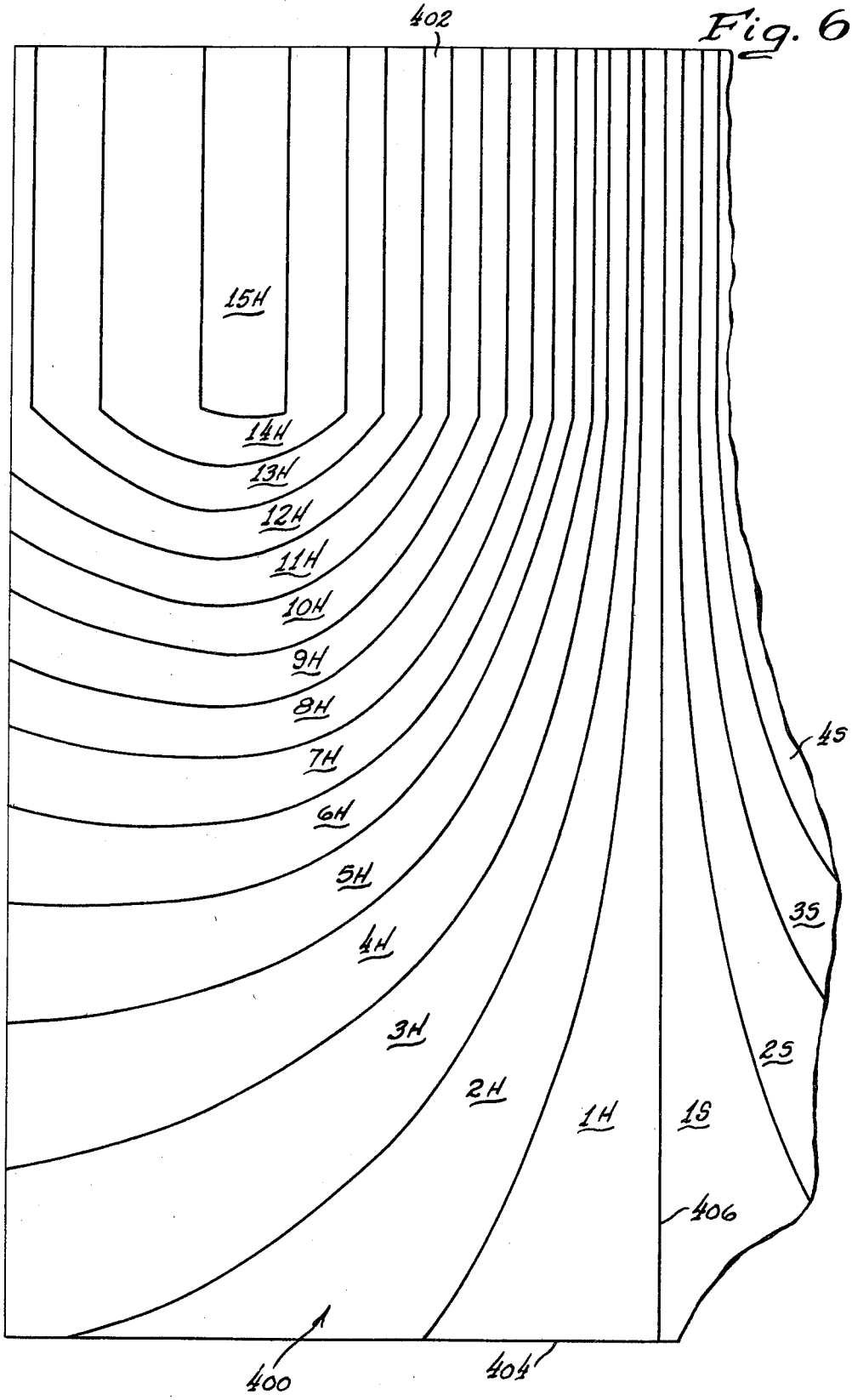

May 26, 1970 J. A. RUSSELL ET AL 3,513,707

GOLF GAME COMPUTING SYSTEM

Filed Oct. 24, 1966 17 Sheets-Sheet 9

Fig. 7

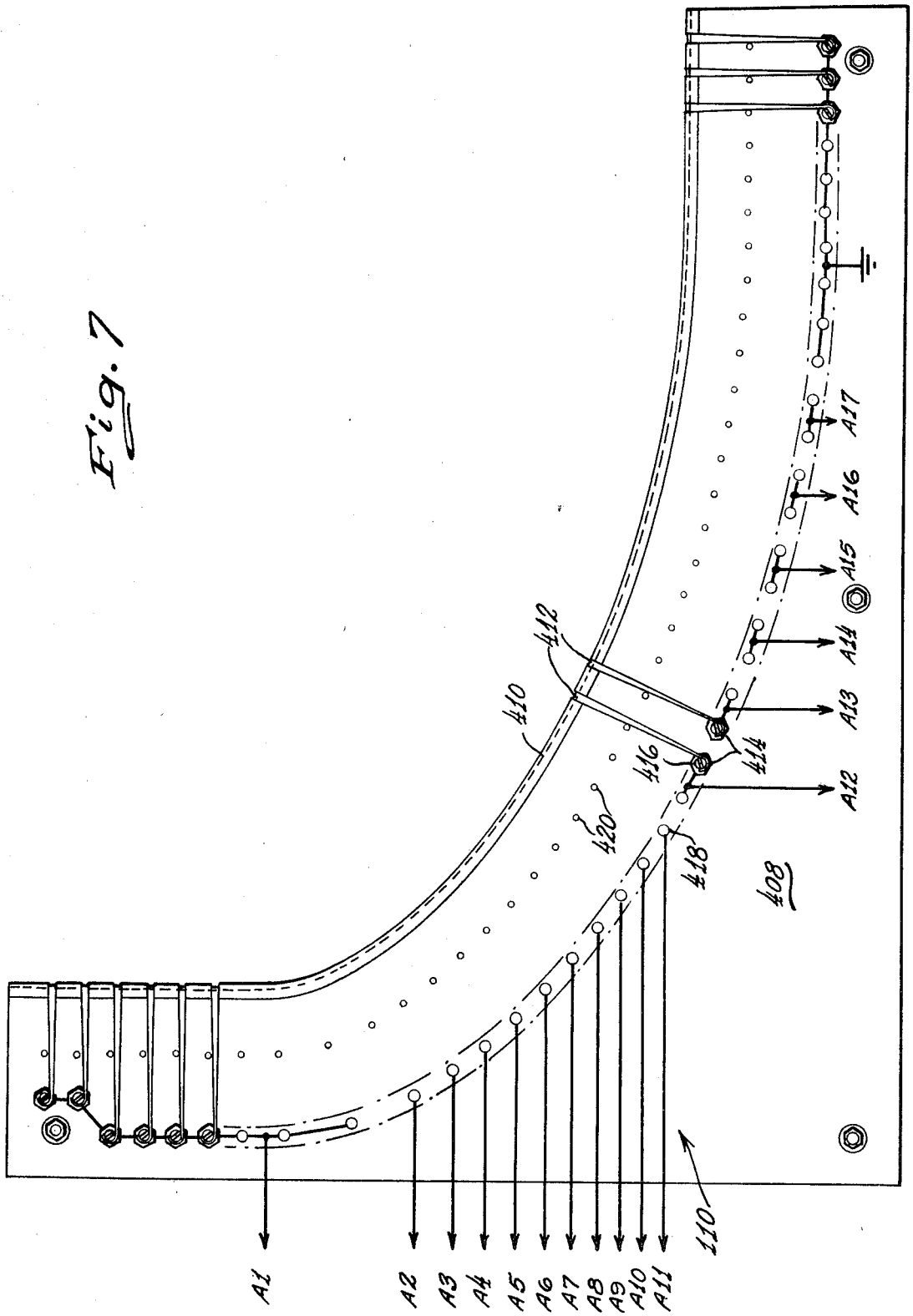

May 26, 1970 J. A. RUSSELL ET AL 3,513,707

GOLF GAME COMPUTING SYSTEM

Filed Oct. 24, 1966 17 Sheets-Sheet 10

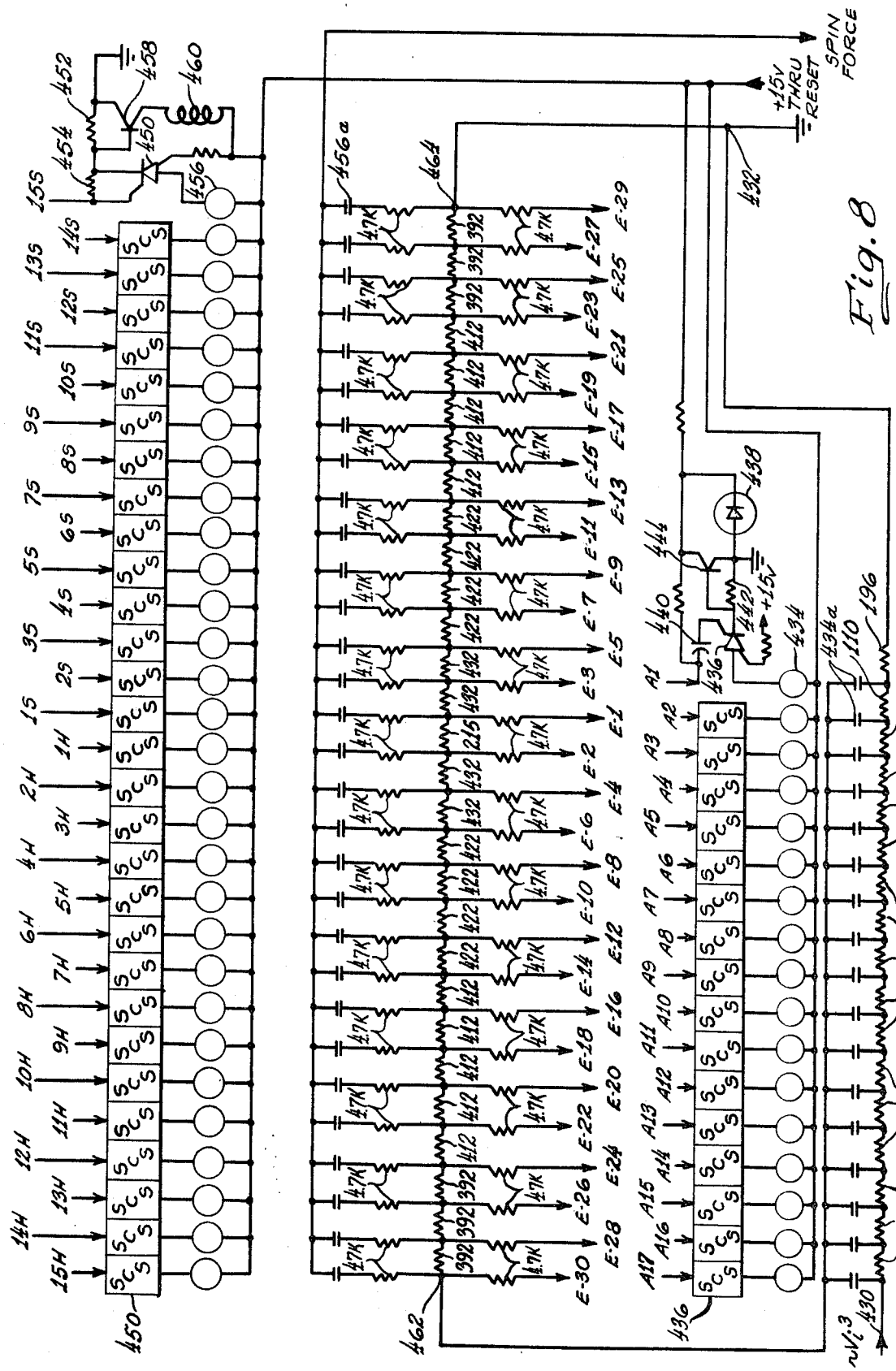

Fig. 8

GOLF GAME COMPUTING SYSTEM

Filed Oct. 24, 1966 17 Sheets-Sheet 11

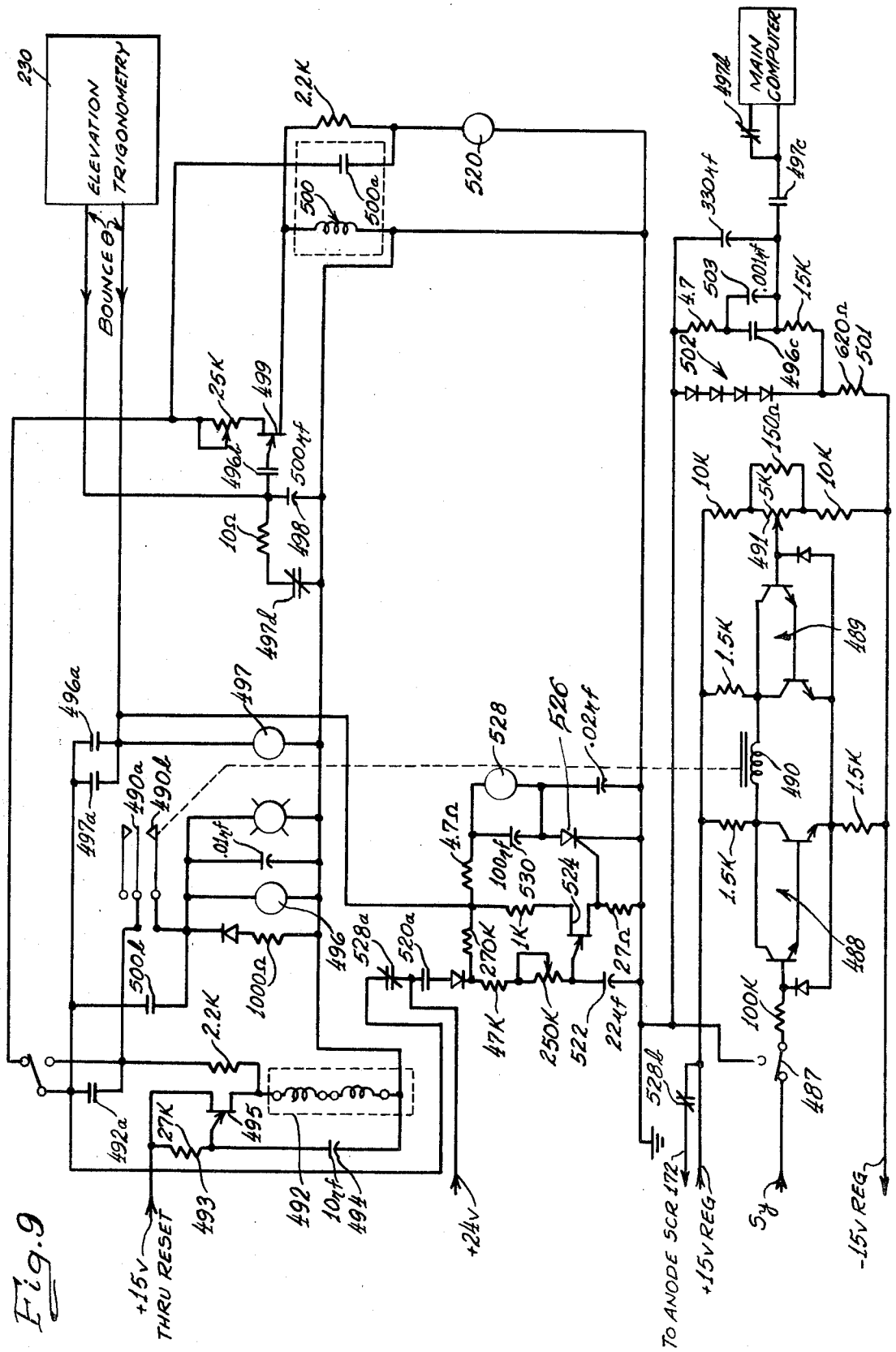

Fig. 9

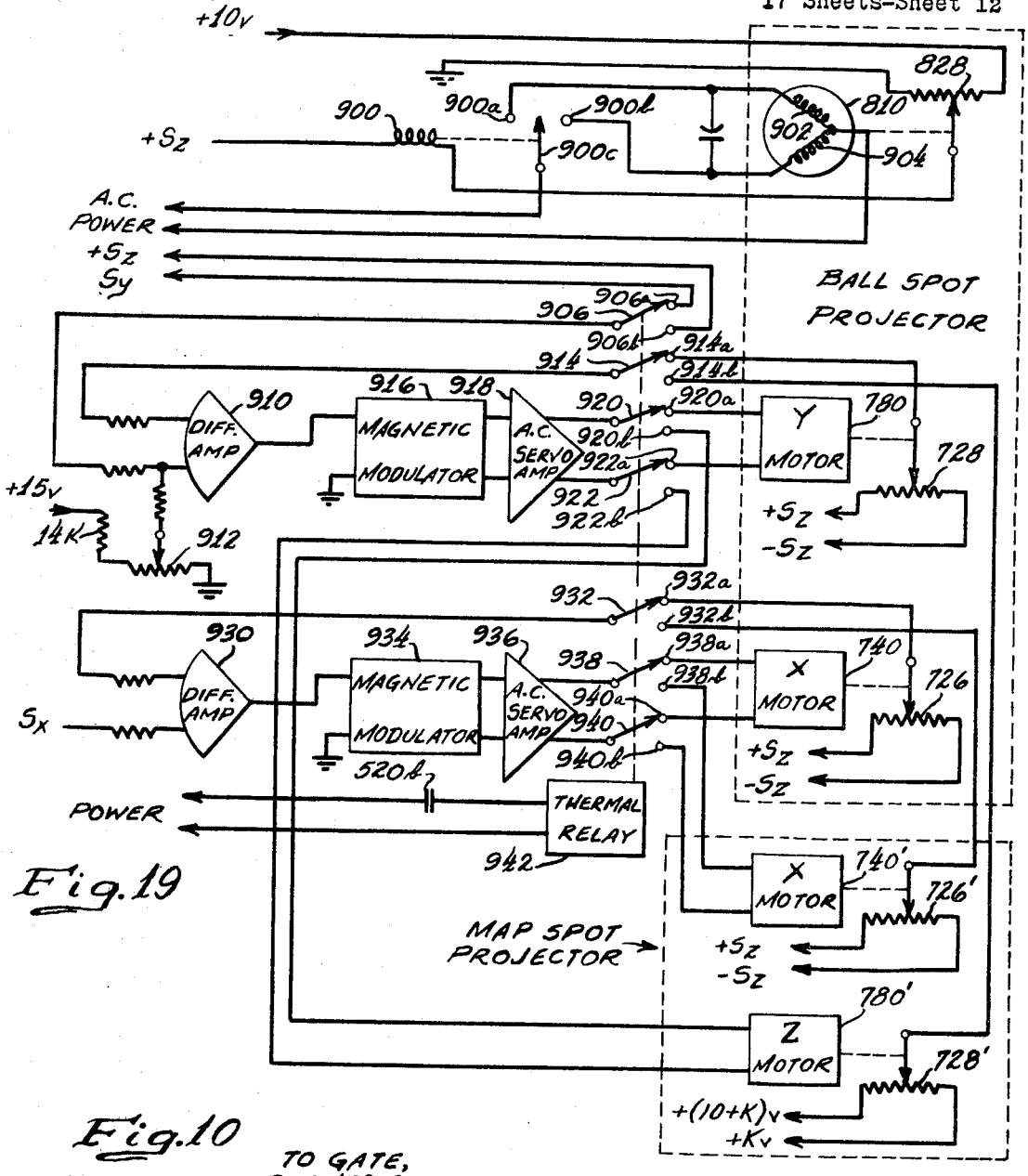
+10v
828
900
900a
900b
900c
810
902
904
+Sz
A.C. POWER
+Sz
Sy
BALL SPOT PROJECTOR
906
906a
906b
914
914a
914b
916
918
910
DIFF. AMP
MAGNETIC MODULATOR
A.C. SERVO AMP
920
920a
920b
922
922a
922b
Y MOTOR
780
728
+Sz
-Sz
+15v
14K
912
932
932a
932b
930
934
936
938
938a
938b
940
940a
940b
X MOTOR
740
726
Sx
520b
POWER
THERMAL RELAY
942
MAP SPOT PROJECTOR
740'
726'
780'
Z MOTOR
728'
+(10+K)v
+Kv

Fig. 19

Fig. 10

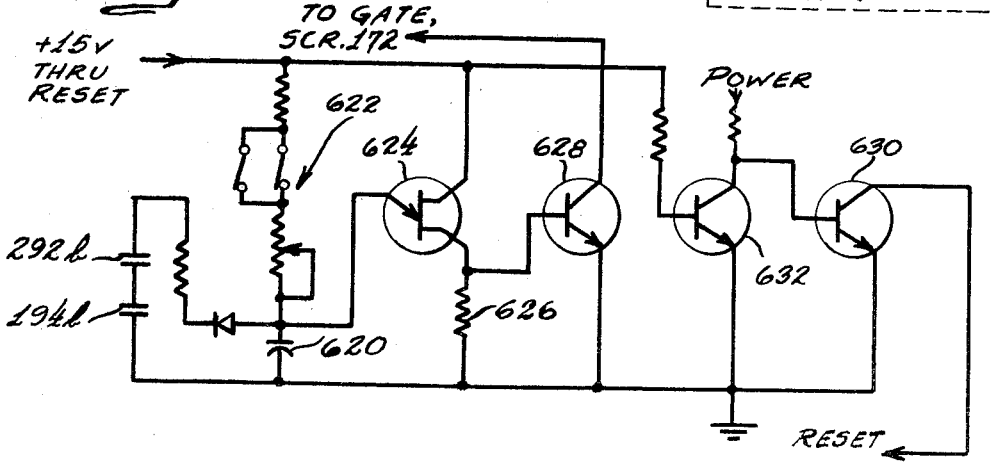
TO GATE, SCR. 172
+15v THRU RESET
622
624
628
630
POWER
292b
194b
620
626
632
RESET

May 26, 1970 J. A. RUSSELL ET AL 3,513,707

GOLF GAME COMPUTING SYSTEM

Filed Oct. 24, 1966 17 Sheets-Sheet 13

Fig. 11.

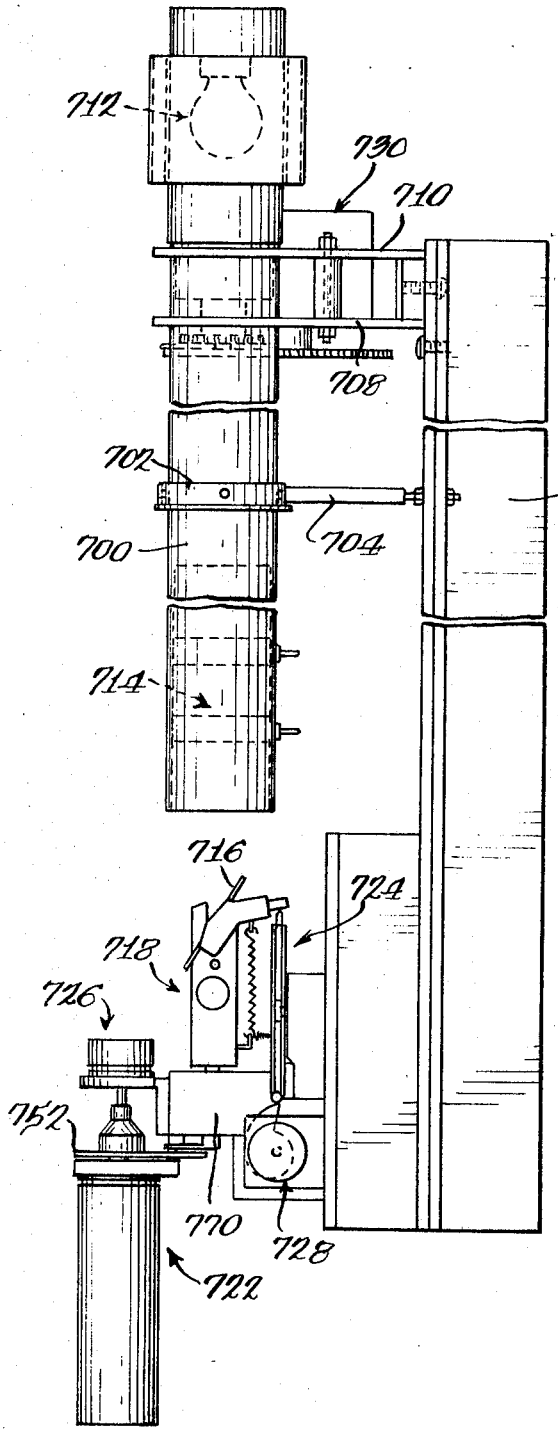

Fig. 16.

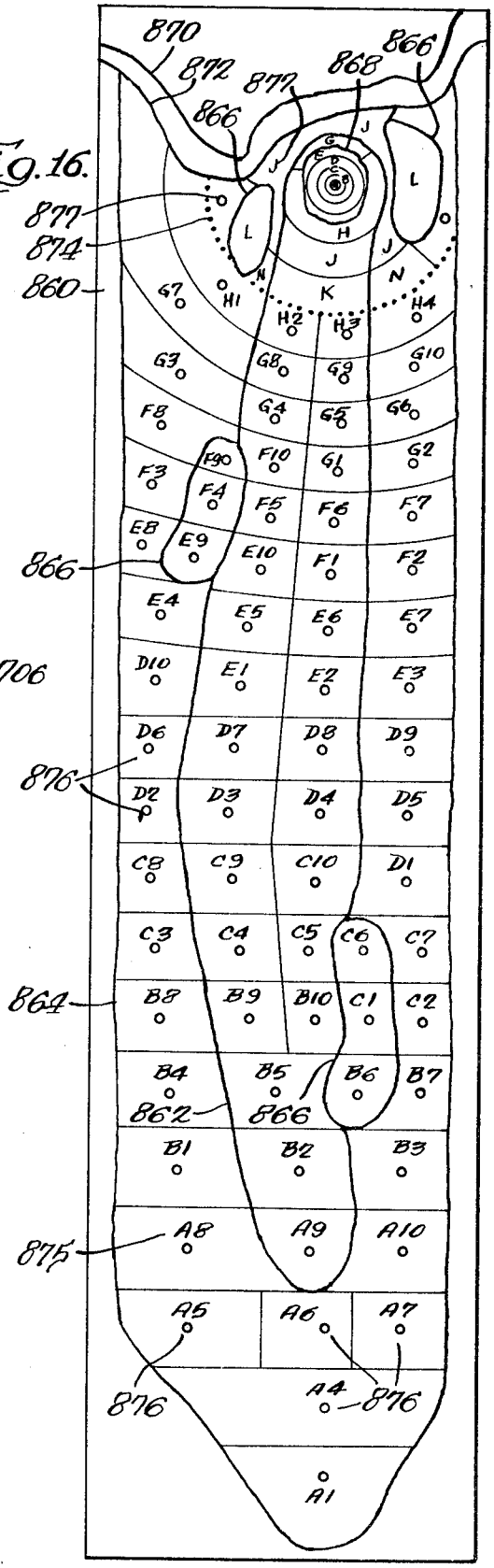

Fig. 12.

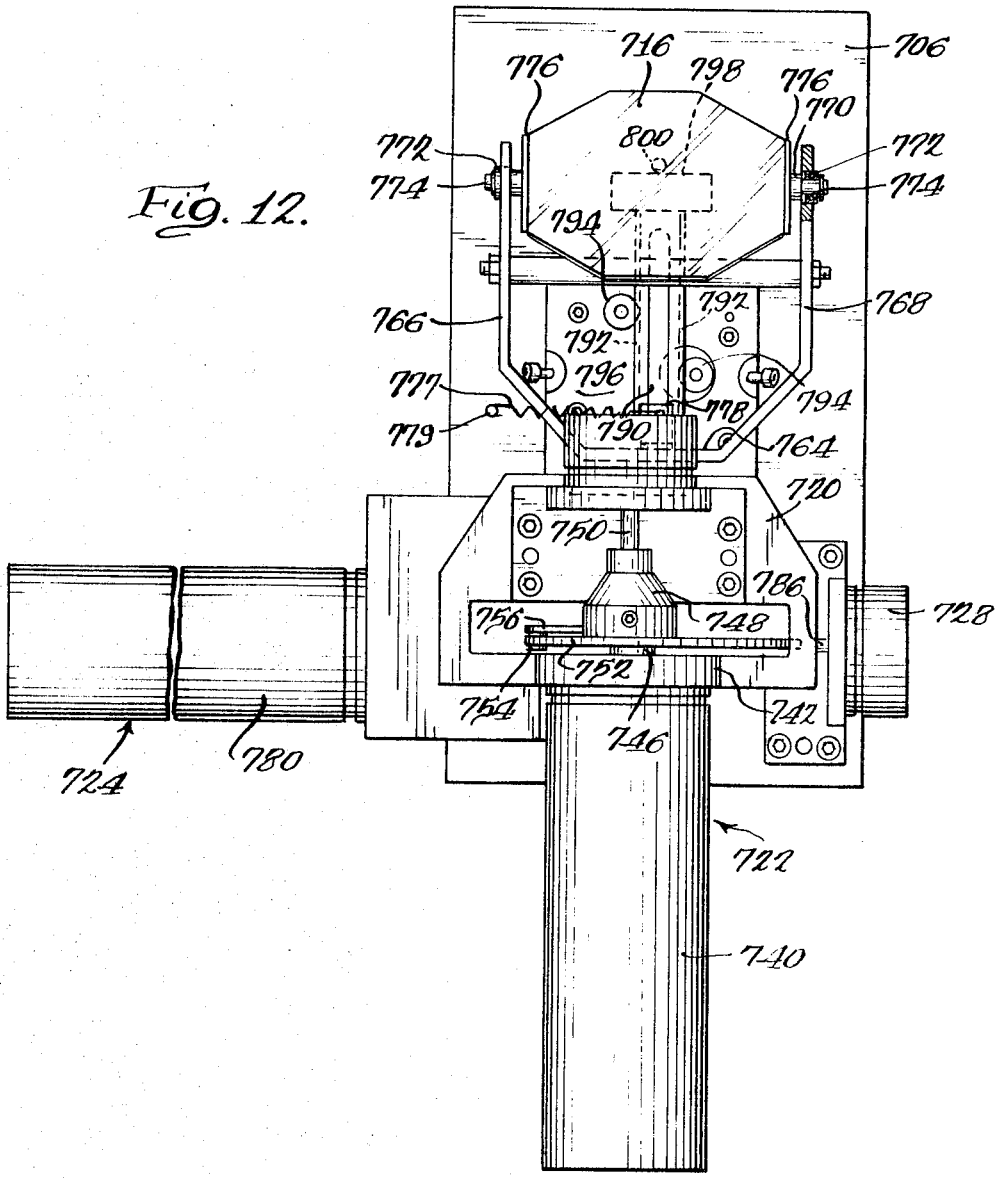
706
716
776
798
776
770
800
772
774
772
774
794
768
766
792
792
796
777
794
779
790
778
764
720
750
786
728
756
748
752
754
742
746
724
780
722
740

Fig. 13.

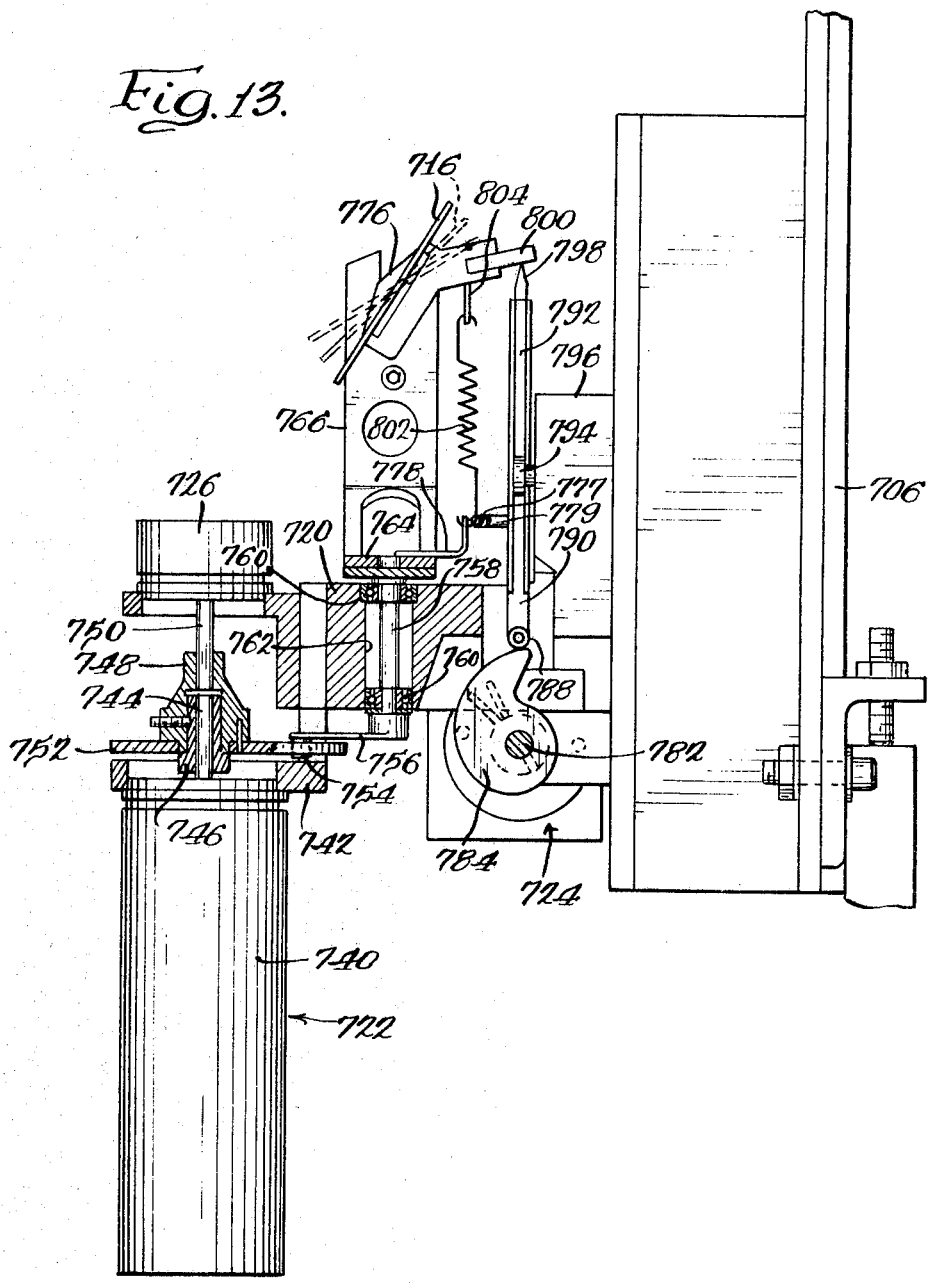
716
804
800
776
798
792
796
766
802
794
778
777
779
726
720
764
790
706
760
758
750
762
760
748
744
788
752
782
756
754
746
742
784
724
740
722

Fig. 14.

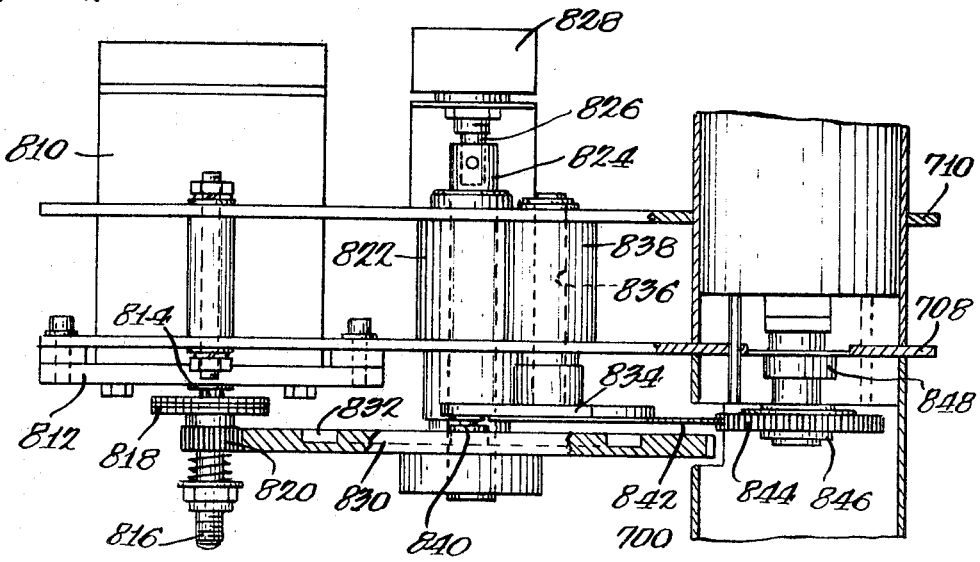
828
826
824
810
710
822
838
836
814
708
834
848
832
812
818
820
830
842
844
846
816
840
700

Fig. 15.

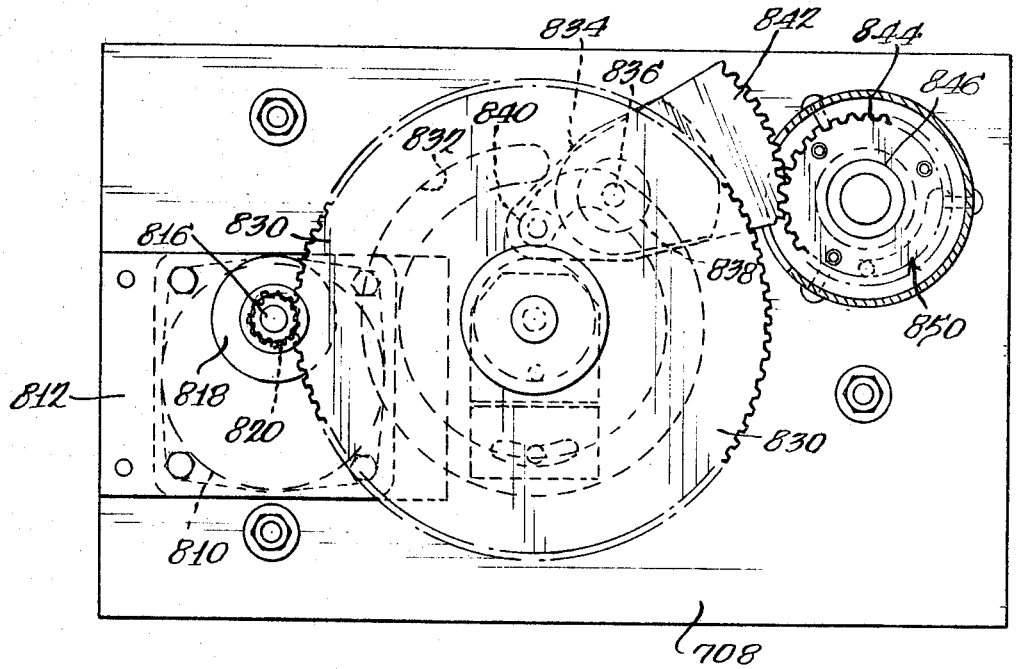
834
842
844
836
846
840
832
816
830
838
850
812
818
820
830
810
708

May 26, 1970 J. A. RUSSELL ET AL 3,513,707

GOLF GAME COMPUTING SYSTEM

Filed Oct. 24, 1966 17 Sheets-Sheet 17

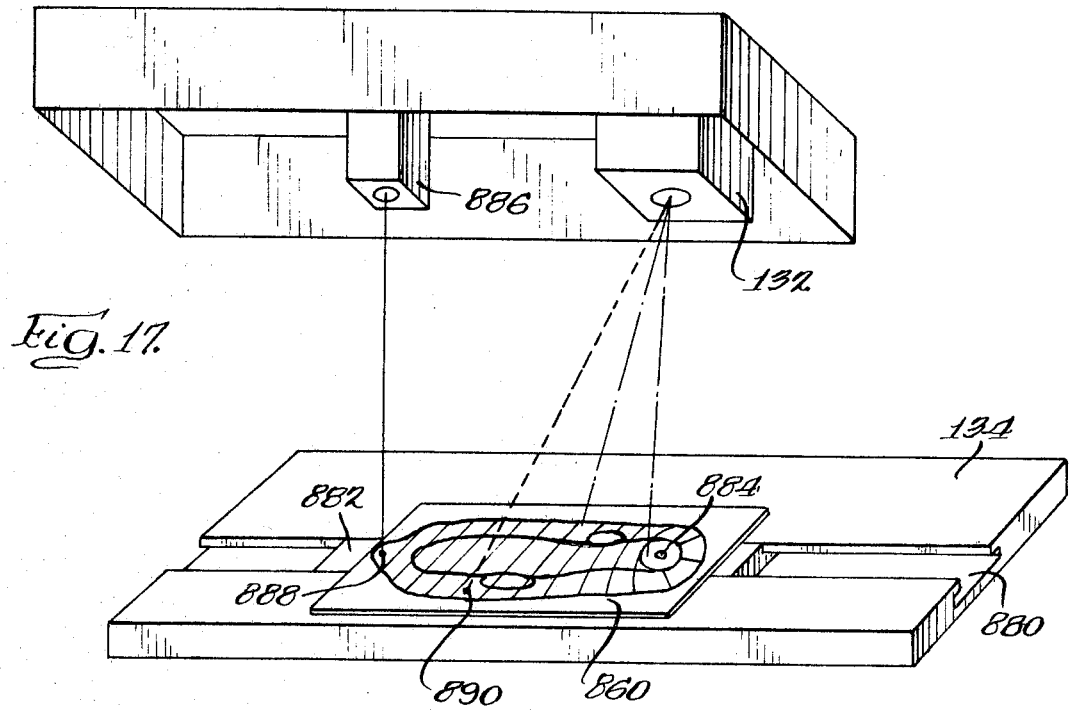

Fig. 17.

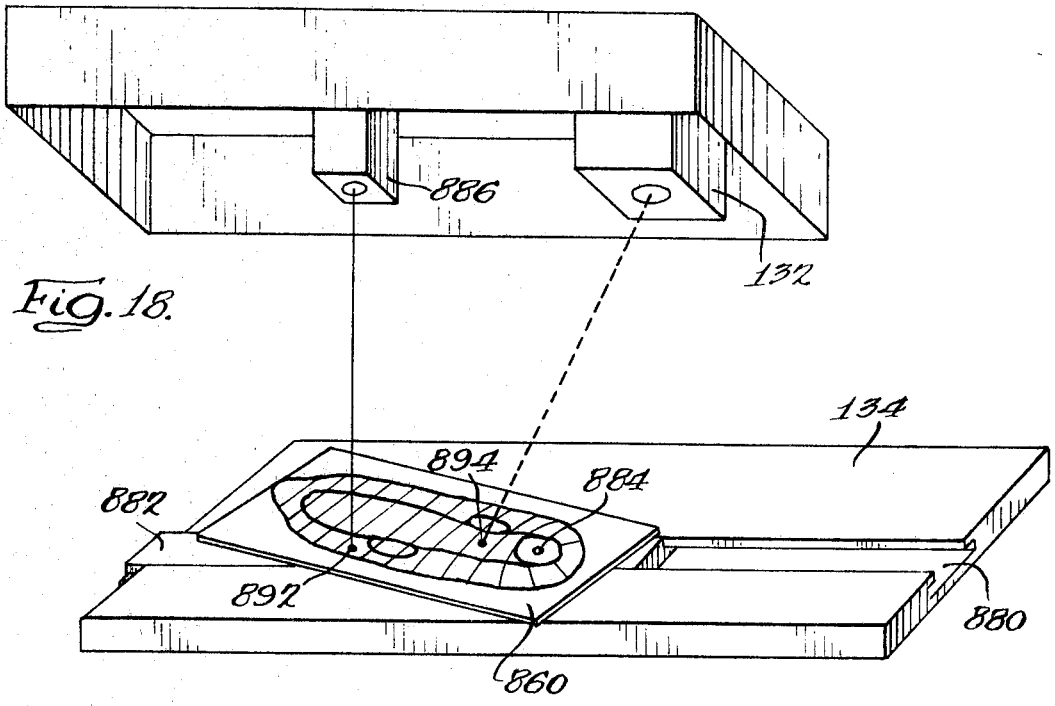

Fig. 18.

United States Patent Office

3,513,707
Patented May 26, 1970

3,513,707

GOLF GAME COMPUTING SYSTEM

Jack A. Russell and Bradford J. Baldwin, Muskegon, Mich., assignors to Brunswick Corporation, a corporation of Delaware

Filed Oct. 24, 1966, Ser. No. 588,922
Int. Cl. G01l 5/02
U.S. Cl. 73—379 54 Claims

ABSTRACT OF THE DISCLOSURE

A golf game computing system that utilizes data relative to the initial direction, the initial velocity and spin of a golf ball hit from a tee to continuously compute instantaneous displacements of the ball in three mutually perpendicular directions throughout the calculated flight of the ball and indicates the same by continuously moving a projected spot on a scene. Factors such as gravity, lift due to backspin, drag and bouncing of the ball are taken into consideration in computation. An indicator operated by the computing system illustrates the calculated point of termination of the shot on a map of a golf hole so that the subsequent shot may be played accordingly and provides the golfer with information relative to changing the displayed scene, or operating a lie selecting device, and chipping and putting. The system includes various features of practical importance for minimizing false triggering of the computer, for automatically resetting the system when false triggering does take place, for disabling the data acquisition portion of the system as soon as data is acquired for a shot and for warning a golfer that he is interferring with the data acquisition system or that the computer is not ready for a subsequent shot.

BACKGROUND OF THE INVENTION

A number of attempts have been made to provide indoor golf games utilizing computer systems for computing the theoretical free flight trajectory of a golf ball struck by a golfer and which is intercepted before it travels a significant distance. Such games have not enjoyed a large degree of commercial success because heretofore they have not been capable of providing a golfer with all pertinent information relative to his shot. For example, in one commercialized version of an indoor golf game, it is considered that a ball will always follow a predesignated trajectory independently of the angle of elevation or azimuth of the shot and the trajectory is lengthened or shortened only in a manner dependent upon the initial velocity of the shot. In all versions known to be commercialized, none take into account the factor of spin that could produce a hook or a slice. While systems that take into account the factor of spin have been proposed, none have been commercialized.

Furthermore, the systems proposed and/or commercialized neglect a multiude of other factors that influence the trajectory of a golf ball and by doing so are incapable of realistically portraying to a golfer a simulation of the trajectory of the shot that would closely follow the trajectory that would be observed by a golfer if he were to hit the same shot on a golf course.

SUMMARY OF THE INVENTION

The principal object of the invention is to provide a new and improved computer system for indoor golf games that maximizes the realism of the results of a shot and displays the results to the golfer.

More specifically, it is an object of the invention to provide such a new and improved computer system utilizing an analog computer.

Another object of the invention is the provision of a computer for an indoor golf game that includes means for determining the initial velocity, the angle of elevation, the angle with regard to the azimuth and the spin on a golf ball struck from a tee, a means for utilizing the determined initial velocity to determine total instantaneous velocity of the ball at any point during its flight in a manner that reflects the effect of drag on the ball, a means for resolving the total instantaneous velocity into instantaneous velocity vectors along three mutually perpendicular axes, a means for introducing the effect on instantaneous velocity of lift and gravity, means for integrating the three instantaneous velocity vectors to provide the instantaneous displacement of a ball at any point in its flight along the three axes and a means for indicating to the golfer during the flight of the ball each of the three displacement quantities.

A further object is the provision of a computer for calculating the theoretical free flight trajectory of a golf ball hit from a tee, a ball spot projector for projecting and moving a spot of light relative to a scene depicting a hole on a golf course to illusrtate the trajectory of the ball hit from the tee, and a means operative near the terminal point of the flight for causing the projecting means to move the spot in a manner simulating the bouncing of a ball.

Yet another object is the provision of a computer for use in an indoor golf game including means for operating the computer comprised of a vibration sensitive element for determining when the flight of the ball is initiated by sensing the sound of the impact of a golf club against the ball, a light sensitive device for sensing when the flight of the ball is initiated by determining when the ball has left a predetermined tee point and a means responsive to the vibration sensitive element and the light sensitive device for actuating the computing means only when both have detected the initiation of the flight of the ball to preclude false triggering of the computer.

A still further object of the invention is the provision of a computing system for an indoor golf game including a means for sensing when the flight of a ball has been initiated from a tee for actuating the computing system, a means spaced along the path of the golf ball from the sensing means for detecting that a ball is in flight and a means responsive to the last-named means for automatically deactuating and resetting the computer means if the last-named means has not detected that the ball was in flight so as to preclude wasteful operation of the computing system.

Another object is the provision of a computing means for an indoor golf game including a means for indicating to a golfer when the computing means is not in readiness to compute the trajectory of the golf ball, means responsive to the actuating of the computing means for actuating the indicating means, and means responsive to the completion of computation by the computing means for deactuating the indicating means.

A further object is the provision of a computing system for an indoor golf game including detecting means for acquiring data relative to the theoretical free flight trajectory of the golf ball, means responsive to detection of a golf ball by the detecting means for thereafter disabling the detecting means to preclude the detecting means from providing the computing means with erroneous information and a means operative after the completion of computation by the computing means for reenabling the detecting means for use in detecting information for a succeeding golf ball flight.

A still further object of the invention is to provide a computer system for use in indoor golf games that takes into effect the factors influencing the flight of the ball

such as initial velocity drag, lift, gravity, initial angle of elevation of the short, initial angle of the shot with regard to the azimuth and spin in computing the theoretical free flight trajectory of the golf ball and provides suitable information to a first projecting means that is arranged to porject a spot of light on a scene representing a portion of the golf course to provide a visual representation of the trajectory of the ball and to a second projecting means that may be used in conjunction with a map of a hole or a golf course to provide the golfer with information relative to the point of termination of a shot so that he may use the information to select a lie for a subseqeunt shot, change the scene to that seen from the point of termination and inform the golfer as to whether succeeding shots should be played with the aid of the computer or on separate equipment such as a putting green without the use of the computer.

Other objects and advantages of the invention will become apparent from the following specification taken in conjunction with the accompanying drawing.

DESCRIPTION OF THE DRAWINGS

FIG. 1 is a side elevation of a room housing a computing system made in accordance with the invention;

FIG. 2 is a schematic illustrating the computer triggering and initial velocity computing systems;

FIG. 3 is comprised of FIG. 3A and FIG. 3B, the latter being adapted to be placed to the right of the former, and is a schematic illustrating a trigonometry matrix for providing information relative to the initial angle of elevation of the shot;

FIG. 4 is comprised of FIG. 4A and FIG. 4B, the latter being adapted to be placed to the right of the former, and is a schematic of the computer circuitry;

FIG. 5 is comprised of FIG. 5A and FIG. 5B, the latter being adapted to be placed to the right of the former, and is a schematic of a trigonometry matrix for providing information relative to the angle of the shot with regard to the azimuth;

FIG. 6 is a planar plan view of a printed circuit used in the spin detector of the instant invention;

FIG. 7 is a side elevation of a form used to support the printed circuit illustrated in FIG. 6 and further illustrates other elements of the spin detector and electrical connections to the compuer;

FIG. 8 is a schematic of a spin determining matrix used in conjunction with the spin detector illustrated in FIGS. 6 and 7;

FIG. 9 is a schematic of the circuitry utilized to control a ball spot projector to illustrate the bouncing of a ball;

FIG. 10 is a schematic of automatic reset circuitry that is operated in the event the computer is improperly energized;

FIG. 11 is a side elevation of a ball spot projector;

FIG. 12 is an enlarged front elevation of a portion of the ball spot projector;

FIG. 13 is an enlarged side elevation of a portion of the ball spot projector with parts shown in section;

FIG. 14 is a front elevation of a portion of a ball spot projector with parts shown in section;

FIG. 15 is a bottom view of a portion of the ball spot projector mechanism;

FIG. 16 is a plan view of a map of a golf hole that may be used in playing a game with an apparatus made according to the invention;

FIG. 17 is a perspective view of a map spot projector system utilizing the map of FIG. 16 at one stage of operation;

FIG. 18 is a perspective view illustrating a stage in the operation of the map spot projecting system subsequent to that illustrated in FIG. 17; and

FIG. 19 is a schematic of a control system for driving the map spot and ball spot projectors with the outputs of the computer.

GENERAL DESCRIPTION

As noted previously, the principal object of the invention is to provide an indoor game system utilizing a computer that controls output functions which are made visually apparent to a golfer and which are designed to give the visual impression the golfer would have received had he been playing on an actual outdoor golf course. Additionally, the output functions of the computer are used to provide data for various peripheral functions required in an indoor golf game.

More specifically, the computer is adapted to be used in a golf game wherein a tee area is arranged in front of a screen which may receive projected scenes from a projector representative of the views as from different portions of a golf course. The screen is of the penetrable type and behind the screen is placed spin detecting equipment. In front of the screen and between the screen and the tee area, other data acquisition equipment is placed; and the arrangement is such that when a golfer hits a ball from the tee area, the ball will travel a relatively short distance, usually less than thirty feet. After such a distance is traveled, the computer will be provided with all the necessary information required to perform its various functions.

A ball spot projector is arranged to project a small spot of light on the screen, which spot of light simulates a golf ball. When the golf ball is in flight, the spot of light will be moved on the screen by the projector under the influence of the computer to illustrate the trajectory of the ball. Means are also provided so that when the ball spot appears to initially contact the surface of the golf course as seen on the screen, it will be caused to bounce and/or roll. The computer includes means for generating bounce and roll signals which are provided to the ball spot projector to cause the latter to move the projected spot to simulate the bouncing and/or rolling of a golf ball on a fairway or a green, etc.

As mentioned above, spin detecting equipment is utilized; and accordingly, during the flight of the ball, the computer provides the ball spot projector with information relative to hook or slice such that the projected spot will give the illusion of a hooking or slicing golf ball.

While the effect of drag on a golf ball in flight is not obviously perceptible to a golfer, it does have an effect on the distance that the shot will travel and influences the trajectory of the ball in flight. The computer includes means for diminishing the velocity of a ball in accordance with the effect of drag as will be seen. As a result, the computed distance a shot would have traveled had it not been intercepted by the spin detecting equipment very accurately represents the actual distance it would have traveled on an outdoor golf course. Furthermore, since the drag information is fed into the ball spot projector along with other information, the trajectory of the ball as evidenced by the projected spot of light on the screen appears to closely simulate that of a ball in flight on an outdoor golf course.

As is well known, when a golf ball is hit properly by most clubs, back spin is imparted on to the ball which tends to provide a lifting force on the golf ball. Of course, the lifting force is somewhat opposed by gravity. The computer further includes means for introducing the effects of lift and gravity on the ball, and the projected spot of light illustrating the trajectory of the ball is controlled accordingly.

The computer also provides information to a meter which indicates the distance each ball would have traveled had it not encountered the pin detecting equipment. Obviously, on an outdoor golf course such a distance can only be estimated; but in an indoor golf game flexibility is added to the installation by providing the golfer with distance information. Additionally, the computer con-

trols an indicator which informs a golfer that the system is ready to handle the information relative to the next shot thereby enabling the golfer to hit the next shot. The computer also provides an indication to the golfer when the system is not ready to utilize further information such that the golfer is informed that the next shot should not be played.

Because the system contemplated by the instant invention provides for hooking and slicing unlike other systems currently commercially available, it will be appreciated that if a golfer hooks a shot. the next scene projected on the screen should be taken from the left side of the fairway or from the left rough as opposed from the center of the fairway as would be the case if the golfer hit a straight ball. Accordingly, it is necessary to indicate to the golfer which scene should be projected on the screen before the next shot is played and that the scene to be selected cannot be chosen merely as a function as distance. Thus, a map of each hole on a golf course is provided and the map is divided into a plurality of zones, each zone representing a scene. In order to indicate to the golfer which zone has shot would have terminated so as to enable him to select the next scene, information from the computer is fed to a second spot projector not unlike the ball spot projector which is arranged to project a spot of light on the zone on the map of the golf hole in which the shot terminated thereby enabling the golfer to select the scene corresponding to that zone for his next shot.

MATHEMATICS OF THE TRAJECTORY OF A GOLF BALL

In order to make the projected ball spot on the screen appear to be a golf ball on an outdoor course, it is necessary to vary it in three distinct ways. Of course, it must be able to move vertically or in a Y direction to illustrate the elevation effect of the shot. It must also be able to be varied horizontally or in an X direction to illustrate the effect of initial direction and that of hook or slice. Finally, it should be varied in size to give the impression of distance in the Z direction. As will be seen, the ball spot projector is controlled in all three ways. However, in order to do such, it will be apparent that the trajectory of a golf ball must be resolved into the three components of azimuth, elevation and length.

It will also be apparent that at any given instant, these quantities will vary from their values at another point of time because the instantaneous velocity of the golf ball is continually changing. In this respect, it will be noted that the instantaneous velocity in the Y or vertical direction will be positive and negative at different portions during the trajectory of a shot. Similarly, if a ball is hooked or sliced, the instantaneous velocity of the ball in the azimuth or X direction may also be positive and negative during different portions of the trajectory depending upon its initial direction with regard to the azimuth. Only in the case of the distance in the length or Z direction, will the instantaneous velocity in that direction be positive or zero. Of course, in any event, the magnitude of the instantaneous velocities in any direction will be continually varying.

It has been found that the instantaneous velocity of a golf ball may be generally considered to follow the equation

$$V_i = V_0 - K_1 \int_0^t V_i^2 dt \tag{1}$$

where:

V_i is the instantaneous velocity,
V_0 is the initial velocity, and
K_1 is the drag coefficient.

It has been found that the drag coefficient K_1 varies with the velocity of the golf ball. For example, when the velocity of the golf ball is less than one hundred feet per second, the air flowing about the golf ball is in a laminar state and K_1 is approximately 0.50. However, at velocities greater than one hundred feet per second, the value of K_1 drops off substantially to about 0.21. While in actuality, the curve representing the value of K_1 for any given velocity does not represent a step function, it has been found that it is sufficiently linear for the velocities of concern such that the aforementioned values may be used. The manner in which the effect of drag is implemented will be seen hereinafter.

From the foregoing, it will be apparent that the one quantity necessary to determine the instantaneous velocity V_i is the initial velocity V_0. The manner in which V_0 is determined will be described hereinafter.

Since V_i may be calculated at any point in the time of trajectory of a golf ball, it will be apparent that it is necessary to resolve V_i into its X, Y and Z components, the X direction being to the right or left of a golfer facing a fairway, the Y direction being up or down and the Z direction being in the direction toward the cup. If θ, the angle of elevation of the shot, is known, it will be appreciated that the velocity in the Y direction is as follows.

$$V_{i_y} = V_i \sin \theta \tag{2}$$

Of course, Equation 2 does not represent the effect on the instantaneous velocity in the Y direction caused by gravity or by lift although it does include the effect of drag. The effect of lift and gravity will be treated hereinafter.

If B, the angle of the initial direction from the Z or the length axis, is known, it will be appreciated that the instantaneous velocity in the X direction may be determined from the following equation.

$$V_{i_x} = V_i \cos \theta \sin B \tag{3}$$

Here again, it will be apparent that Equation 3 does not include the effect on the instantaneous velocity in the X direction caused by hook or slice spin. The effect of spin on the instantaneous velocity in the X direction will be discussed hereinafter.

Knowing both the angle of elevation and the angle with regard to the azimuth, it will be appreciated that the instantaneous velocity in the Z or length direction may be determined by Equation 4 below.

$$V_{i_z} = V_i \cos \theta \cos B \tag{4}$$

It will be apparent that Equation 4 above, does not take into account any velocity factors in the Z direction due to lift or hook or slice spin. In this respect, it has been determined that the influence of these factors on instantaneous velocity in the Z direction are relatively insignificant and may be neglected.

Turning now to the effect of lift, it has been determined that a good approximation of the force acting on the ball due to lift will be achieved if lift is considered to be a function of the instantaneous velocity acting in a direction normal to the initial angle of elevation of the ball. Accordingly, the force provided by lift is treated as follows.

$$\text{Lift Force} = K_2 V_i \tag{5}$$

where:

K_2 is a constant.

It will be recognized that the acceleration due to gravity will be constant and acts in a strictly vertical direction. It is desirable to add vectorily the force of lift and the force of gravity, and thus lift force must be resolved into its component in the Y direction. It will then be apparent that the effect on the instantaneous velocity in the Y direction due to the combined effect of lift and gravity is illustrated by Equation 6.

V_{i_y} (due only to lift and gravity) =

$$\int_{t=0}^{t \text{ at 1st } S_y=0 \text{ after } t=0} (K_2 V_i \cos \theta - g)\, dt \tag{6}$$

where:

g is the constant force of gravity.

It will be appreciated that once a ball has contacted the ground for the first bounce in its trajectory, the kinetic energy imparting a lift spin will be substantially totally dissipated. Accordingly, after the first bounce of a ball, the factor of lift may be disregarded, and thus in Equation 6 above the upper limit of the integral is the time at the first time when the Y distance is equal to zero occurring any time after $t=0$. Hereinafter, such a time will be represented as $t=1B$.

While lift may be disregarded after the first bounce, it will be apparent that gravity should not be. Accordingly, it is necessary to provide for gravity during bouncing of the ball. It is also necessary to consider the velocity in the Y direction after bounce due to the bouncing of the ball. It has been found a good approximation of the velocity in the Y direction during bounce and exclusive of gravity is met by the quantity $V_i \sin \theta$. The effect of gravity on the instantaneous velocity in the Y direction may be set forth as follows.

$$V_{i_y} \text{ (due only to gravity during bouncing)} = -(V_{i_g})_{t=1B}^{t=R} \tag{7}$$

where:

V_{i_g} is the instantaneous velocity in the Y direction due to the force of gravity and which is effective from the time of the first bounce ($t=1B$) until the time when the ball comes totally to rest ($t=R$).

By combining Equations 2, 6 and 7 above, it will be apparent that the distance in the Y direction may be expressed as follows:

$$S_y=\int_{t=0}^{t=R}\left[V_i \sin\theta-(V_{i_g})_{t=1B}^{t=R}\right]dt+\iint_{t=0}^{t=1B}(K_2V_i\cos\theta-g)dt^2 \tag{8}$$

For the limits shown in Equation 8, it will be apparent that the distance in the Y direction S_y will be zero. However, it will be apparent that the distance in the Y direction at any instant during the flight of the ball may be determined by merely changing the upper limits of the various expressions to reflect the time at the instant the Y distance is desired.

Reflecting a moment on the development of Equation 8, it will be seen that a number of factors are included to provide realism in the game. For example, it will be recalled that V_i includes an adjustment for drag and the energy loss due to contact with the ground during the bouncing of the ball. Similarly, the expression $K_2V_i \cos \theta$ provides for the effect of lift while the factors V_{i_g} and g take into consideration the effect of gravity at different portions of the flight. The effect of bounce or roll resides in the factor $V_i \sin \theta$ and its combination with the gravity factor V_{i_g}.

Turning now to the distance in the Z direction S_z, it will be appreciated that this quantity may be obtained merely by integrating the expressions set forth in Equation 4 from time is equal to zero until the time at which the ball comes to rest. Thus, the distance in the Z direction is indicated in Equation 9 below.

$$S_z=\int_{t=0}^{t=R} V_i \cos\theta \cos B \tag{9}$$

Here again, it will be apparent that the distance in the Z direction at any instant during the flight of the ball may be found by choosing the upper limit of the integral appropriately.

The foregoing leaves for consideration only the effect of hook or slice spin in the X direction. By means of a matrix that measures the deviation of a golf ball from a no spin trajectory, the force applied to the ball due to the effect of side spin is determined. For purposes of the instant application, the side spin force may be considered to be determined imperically and the manner in which this is accomplished will be described in detail hereinafter. Once the force is obtained, it will be appreciated that its effect on the velocity in the X direction may be determined by integrating the force quantity as indicated in Equation 10.

$$V_{i_x} \text{ (due only to spin)} = \int_{t=0}^{t=R} \text{(side spin force)}\ dt \tag{10}$$

By combining Equations 3 and 10 above and integrating, the total distance in the X direction at any instant of time during the flight of the golf ball may be determined. Thus, Equation 11 sets forth an expression for the distance in the X direction.

$$S_x=\int_{t=0}^{t=R}\left[V_i\cos\theta\sin B+\int_{t=0}^{t=R}\text{(side spin force)}\ dt\right]dt \tag{11}$$

Again, it will be appreciated that the distance in the X direction at any instant during the flight of the golf ball may be determined merely by adjusting the upper limits of the integrals involved appropriately.

IMPLEMENTATION

In order to compute the quantities as set forth in Equations 1–11 under the preceding heading, an analog computer is used. Through the use of the analog computer, the distance in each of the X, Y and Z directions is determined instantaneously at virtually every instant of time during the flight of the golf ball. The exception to the foregoing statement resides in the very early portion of the light of the golf ball, i.e. about the first thirty feet of its flight, during which time the data, namey the initial velocity V_0, the elevation angle θ, the azimuth angle B and the displacement, if any, of the actual flight of the ball from a theoretical no side spin trajectory is acquired. Once these quantities are obtained, the X, Y and Z distances are continually computed throughout the flight of the ball, and a perceptible indication of each quantity is provided by the position of the projected ball spot on the screen by a projector which is operated in accordance with the magnitude of the quantities.

SPECIFIC DESCRIPTION—ENVIRONMENT

An exemplary embodiment of the invention in the environment of an indoor golf game is illustrated in FIG. 1. In a room having a floor **100**, an elevated platform **102** is placed. A point **104** on the platform designates the point at which a ball it to be placed and driven by the golfer. A penetrable screen **106** is provided in front of the point **104** and is arranged to have golf balls driven thereat. The penetrable screen **106** preferably is of the type described in the copending application of Cornell et al., Ser. No. 540,917, filed Apr. 7, 1966, now U.S. Pat. No. 3,420,524, and assigned to the same assignee as the instant invention. Behind the penetrable screen **106** is an ellipsodial shell **108** which receives golf balls driven from the tee point **104** through the screen **106** and rebounds the golf ball so driven to a spin detector **110**.

The point **104**, the shell **108** and the spin detector **110** are preferably arranged in the manner set forth in the copending application of Cornell and Uecker, Ser. No. 470,363, filed July 8, 1965, now U.S. Pat. No. 3,364,751, and assigned to the same assignee as the instant invention. For details of the specific construction, reference may be had to said Cornell and Uecker application. For the purposes of the instant disclosure, it is sufficient to say that the arrangement is such that a ball hit from

the point **104** and striking the shell **108** will rebound to very nearly the same point on the spin detector **110** regardless of its angle with relation to the azimuth or its elevational angle if the ball has no spin. If the ball has spin, it will deviate from such a point an amount proportional to its spin and the deviation is measured for purposes of determining side spin.

For purposes of determining the initial velocity V_0 and the elevational angle θ, a photocell array, generally designated **112**, is provided. The photocell array **112** consists of twenty photocells **114** that are placed adjacent one wall of the room in which the game is to be played. Adjacent the opposite wall of the room are twenty corresponding masked light sources that are aligned with the corresponding ones of the photocells **114**. The over-all arrangement is such that a ball hit from the point **104** will break the beam of light passing from one or two of the light sources to one or two of the photocells. In this respect, the twenty beams of light from the light sources to the photocells **114** are arranged arcuately about the point **104** in a semicircle having a radius of about four feet. Additionally, when considering a horizontal plane encompassing the point **104**, the photocells and their corresponding light sources are arranged arcuately about the point **104** with their centers in two degree increments from a point one degree above the horizontal plane to a point 39 degrees above the horizontal plane. Thus, if a ball were to leave the point **104** at a one degree angle with respect to the horizontal plane, it will be apparent that it would break the beam of light between the lowermost photocell **114** and its associated light source. As will be seen, the shading of a photocell is used to provide the required information for determining the angle of elevation of the shot.

As mentioned above, the photocell array **112** is also used in determining the initial velocity V_0. Since the straightaway distance between the point **104** and the photocells **114** is known, if the time at which the ball leaves the point **104** is known, and the time at which the ball breaks one of the beams of light from the light sources to the photocells **114** is known, it will be apparent that the velocity can be computed. In order to determine when the ball leaves the point **104**, a microphone **116**, or other vibration sensitive element, is placed adjacent the point **104** and will pick up the sound of a golf club hitting a ball at the point **104** which, of course, will occur when the ball leaves the point **104**. Additionally, to prevent false triggering of the velocity determining circuit, in the ceiling **118** of the room, there is placed a source of light **120** which is focused upon the point **104**. Adjacent the source of light **120** is a photocell **122** which is arranged to receive light reflected from the source **120** by a ball at the point **104**. Of course, when the ball is struck and moves away from the point **104**, there will be nothing at the point **104** to reflect the light; and accordingly, the photocell **122** will also detect when the ball leaves the point **104**.

At first blush, it may appear that the use of both the microphone **116** and the light source **120** and photocell **122** arrangement would be redundant in that either one alone ccould be utilized. However, the arrangement just described is particularly advantageous in contrast to prior art systems which use either a microphone system or a photocell system but not both in that, as is well known, many golfers prefer to take practice swings before they actually hit the ball. If a golfer were to take a practice swing and the club were to encounter the upper surface of the platform **102**, it would be apparent that the microphone **116** would respond thereto initiate operation of the velocity determining circuit when in fact such would not be the case.

Similarly, in prior art systems where photocells are used, it will be appreciated by those skilled in the art that in most such instances the photocells are used to receive horizontally projected light beams. In such an instance, it will be apparent that a practice swing could break a horizontally projected light beam and cause false triggering if only such a photocell triggering were to be used. In the instant system, however, means are provided to be described hereinafter which preclude the energization of the velocity determining circuit unless the light beam from the source **120** to the photocell **122** is broken and the microphone **116** simultaneously registers the sound of the club hitting the ball.

In order to determine the angle of the shot with regard to the azimuth, a second photocell array **124** is provided. The photocell array **124** is mounted on the floor **100** of the room, and there is also provided an array of aligned masked light sources **126** mounted on the ceiling of the room directly above the photocell array **124**. The photocell array **124** consists of forty-six photocells **128** which are arranged transversely to the line at which a ball hit straight from the point **104** would take, there being twenty-three such photocells on each side of the line.

The centers of the photocells **128** are spaced apart a distance equal to the diameter of a golf ball. Thus, it will be apparent that the spacing of the photocells **128** does not correspond to an integral, angular increment with regard to the point **104**, but this difference is taken into consideration in the arrangement of the azimuth trigonometry matrix as will be seen. As a result of the just described construction, it will be apparent that the angle with respect to the azimuth of a golf ball struck at the point **104** may be obtained.

As mentioned previously, it is desirable to provide a projection of a scene on a golf course onto the screen **106**. Accordingly, a projection booth **130** is suspended from the ceiling **118** to project a selected image of a scene on a golf course onto the screen **106**. The instant invention contemplates the use of a projector such as that described in the copending application of Pratt et al., Ser. No. 574,218, filed Aug. 22, 1966, and assigned to the same assignee of the instant application, although another projector could be used. In order to facilitate realism, it is desirable, however, that some means identical or similar to those disclosed in the aforementioned application of Pratt et al. for accurately aligning the projected image at a predetermined position on the screen be employed.

The projection booth **130** also houses a ball spot projector which projects a spot of light on the screen **106** to simulate the trajectory of a golf ball relative to the scene projected on the screen **106**. Finally, the projector housing **130** also supports a second spot projector **132** which is utilized to project a spot of light downwardly onto a plotting table **134**. The spot of light projected from the projector **132** is directed onto a map (not shown in FIG. 1) to illustrate where the flight of the ball would have terminated on the golf hole by illustrating the point of termination on the map of the golf hole. The plotting table **134** additionally may support a console **136** which houses the controls for the scene projector and, if desired the controls for an automatic lie material selecting device such as that disclosed in the copending application of Anderson, Ser. No. 545,411 filed Apr. 26, 1966, and assigned to the same assignee as the instant application.

Finally, a third source of light **138** is mounted on the ceiling **118** of the room. The third source of light **138** may be clustered in a triangular arrangement with the light source **120** and the photocell **122**. By means to be described hereinafter, when the computer is not ready to digest the information for a succeeding shot, the light **138** is energized while the light **120** is deenergized. By making the light source **138** project a beam of light of a color different from that projected by the light source **120**; and by deenergizing the source of light **120** whenever the light source **138** is energized, it will be appreciated that an arrangement is provided that will preclude deenergization of the photocell **122** when the computer is not ready to consider new information and additionally

provide a perceptible indication of the fact that the computer is not in readiness. For example, the source of light **120** may provide a white beam of light while the source of light **138** may provide a red beam of light. Additionally, if desired, the source of light **138** may be made to flash off and on when the computer is not in readiness.

DETERMINATION OF INITIAL VELOCITY

As mentioned previously, initial velocity is determined by measuring the time that it takes for a ball to move from the tee point **104** to the elevation photocell array **112**. Since the distance from the tee point **104** along the flight of the ball to the elevation photocell array **112** is known, it is only necessary to divide that distance by the time required for the ball to cover the distance to determine the ball velocity. As seen in FIG. 2, the measurement of the time is accomplished by means of a conventional electronic clock **150** and a conventional twelve bit binary counter **152**. As is well known, the clock **150** is comprised of a free running multivibrator and for purposes of the instant invention, is preferably one of the type which may be started, stopped and then requires a reset signal before it may again be started.

The output of the clock **150** is in the form of a string of timed electrical pulses which are fed in as an input to the least significant bit of the binary counter **152**. Each pulse from the clock **150** will cause the binary counter **152** to increase the count by one, it being appreciated that the number contained in the binary counter at any given instant will be in binary form as opposed to decimal form. Each bit of the binary counter **152** is comprised of a flip-flop (i.e. a bi-stable multivibrator) and includes a reset input so that at a desired time during the computer cycle as will be described hereinafter, the counter **152** may be reset to a zero condition.

Assuming that the clock **150** has been reset and is thus capable of providing the binary counter **152** with a string of pulses upon a proper start signal, the binary counter **152** will begin to count when the clock is started. As mentioned above, each pulse from the clock **150** provided to the least significant bit of the binary counter **152** will increase the count contained in the counter **152** by one, and as a result, the longer the period that the clock **150** is permitted to run, the greater the count in the binary counter **152**. As will be seen, the clock is started when the ball leaves the tee point **104** and is stopped when the ball passes through the elevation photocell array **112**. Thus, the count on the binary counter **152** is indicative of the time required for the ball to pass between the two points just mentioned. In order to convert the time quantity contained in the binary counter **152** to a measure of the initial velocity of the ball, and also to convert the digital quantity contained in the binary counter **152** to an analog quantity, a first digital to analog conversion matrix, generally designated **154**, is provided.

The matrix **154** is also arranged to provide the required division of the distance traveled by the elapsed time while it is converting the digital quantity to an analog quantity. The matrix **154** consists of twelve resistive legs connected in parallel, each of which is associated with a corresponding one of the bits of the binary counter **152**. For purposes of clarity, the legs have been referenced with the designations FDA**1**–FDA**2048**, the designations FDA standing for the first digital to analog conversion matrix and the number **1**–**2048** corresponding to the binary number that may be contained in the corresponding bit in the binary counter **152**.

As mentioned above, each leg of the matrix **154** is associated with a corresponding bit of the binary counter **152**. The association is made by means of reed switches which have their coils connected to respective ones of the bits of the binary counter **152** such that when their associated bit is in a so-called "set" condition, the reed switch coil will be energized. The association is completed by means of contacts which are closable in response to energization of the reed switch coils and which are placed in respective ones of the legs of the matrix **154**. Again, for purposes of clarity, the reed switch switches are designated by the reference characters RS**1**–RS**2048**, the RS standing for the reed switch and the number standing for the binary number contained in the bit of the binary counter **152** with which the reed switch is associated.

The corresponding contacts of the reed switch RS**1**–RS**2048** in the first digital to analog matrix **154** are designated RS**1***a*–RS**2048***a*. Each of the contacts RS**1***a*–RS**2048***a* has a common connection through a resistor to ground. The other side of the contacts RS**1***a*–RS**2048***a* are connected to the various resistors and their associated legs of the matrix **154**. To complete the parallel connection of the legs comprising the matrix **154**, the sides of the resistive legs opposite the common connection to ground have a common connection to a voltage source through a 220 ohm resistor **156** and a conventional constant current circuit **157**. The common junction of the circuit **157** and the legs FDA**1**–FDA**2048** has an input connection to a Darlington connected emitter follower **158**. The output of the emitter follower **158** provides a voltage quantity which is directly proportional to the initial velocity V_0.

The resistive quantities of each of the legs FDA**1**–FDA**2048** together with the voltage of the source are indicated on the drawings and approximately correspond to the relationship

$$r_B = 2^{n-B} r_n \qquad (12)$$

where:

n is the number of bits comprising the binary counter,
B is the bit of the binary counter with which the resistive leg is associated, and
r_n is the resistance of the leg associated with the nth bit of the binary counter.

The particular resistive value chosen for the nth bit may be selected appropriately in accordance with the voltage of the voltage source in accordance with the desired relation between V_0 as a voltage quantity and V_0 as a quantity expressed in feet per second or miles per hour, etc.

The operation of the velocity determining system in converting a digital time quantity into an analog velocity quantity will become apparent from the following examples.

Assume that only the least significant bit of the binary counter **152** is set. It will be appreciated that such a condition corresponds to an extremely low time and thus an extremely high velocity. In such a situation, current may only flow through the leg FDA**1** and due to the extremely high resistance of this leg with regard to the rest of the remainder of the system, it will be apparent that the voltage applied to the emitter follower **158** will be almost equal to the voltage of the voltage source. As a result, the output of the emitter follower **158** in terms of voltage will be rather high to thereby indicate a high initial velocity of the golf ball.

On the other hand, if it were to be assumed that only the most significant bit of the binary counter **152** was in a set condition, then it would be apparent that only the leg FDA**2048** will have current passing therethrough. Because of the very low resistive value of the leg FDA**2048**, it will be apparent that the voltage applied to the emitter follower **158** will be relatively low, and as a result, its output which is representative of the initial velocity will also be low. It will be recognized that in such a situation the voltage output representative of the initial velocity should be relatively low in that before the most significant bit of the binary counter **152** may be set, a significant time will have elapsed which means that the velocity of the ball in passing between the tee point **104** and the elevation photocell array **112** was relatively slow.

As a third example, let us assume that any two of the bits of the counter **152** are set. In such a situation, it will

be apparent that the corresponding two legs FDA1–FDA2048 will have current passing therethrough and in such a situation the resistance presented by the matrix will be the parallel combination of the two legs that are conducting. In such a situation, a voltage drop across the matrix **154** will be less than that if only one or the other of the two legs were conducting and thus the voltage representative of V_0 will be less. It will be recognized that such should be the case in that if two bits of the counter **152** are set, the counter will obviously contain a number larger than either of the numbers it would have contained had only one or the other of the two bits been set. Since such corresponds to a greater elapsed time, it follows that the velocity should be lower.

The manner of initiating operation of the clock **150** to provide one or more pulses to the binary counter **152** will now be described. It will be recalled that in conjunction with the description of FIG. 1, it was stated that two separate triggering systems are used, one being an audio system utilizing the microphone **116** and the second a video system utilizing the photocell **122**. As seen in FIG. 2, the output of the microphone **116** is fed to an amplifier **166**. Similarly, the output of the photocell **122** is fed to an amplifier **168**. The outputs of the amplifiers **166** and **168** are utilized as inputs to a conventional logical gate that performs an AND function such as the AND gate **170** illustrated.

It will be recognized by those skilled in the art that the AND gate **170** will only provide a desired output when the requisite signals are present on all of its inputs. Thus, if only the microphone **116** as actuated by a sound made as when a club strikes the floor surface **102** (FIG. 1) and the photocell **122** is not deactivated by the breaking of the light beam from the light source **120** (see FIG. 1), the AND gate **170** will not provide a triggering signal. Similarly, if only the light beam is broken thereby deactivating the photocell **122** and there is no sound of a club encountering the floor **102** or striking a golf ball, the AND gate **170** will not issue a triggering output. However, when both signals are present, the output of the AND gate **170** will turn on a silicon controlled rectifier **172** which, when turned on, provides a start signal to the clock **150**. The silicon controlled rectifier **172** is used to maintain a start signal at the clock **150** in that the output of the AND gate **170** will only be momentary due to the momentary nature of the sound which triggers the microphone **116**. The silicon controlled rectifier **172**, when turned on, is also used to provide power to a number of other components and legends in the drawings indicating that 15 volt power through a reset is to be applied to a particular line designate a connection to the silicon controlled rectifier **172**.

The manner of turning off the silicon controlled rectifier **172** to ready the velocity determining circuit in a condition wherein it is ready for the next golfer will be described hereinafter.

The manner in which the clock **150** is stopped will now be described. It will be recalled that velocity is measured by determining the time it takes a ball to travel from the tee point **104** to the elevation photocell array **112**. Specifically, whenever any one of the photocells **114** comprising the elevation photocell array **112** is shaded by the passage of a ball through the space between the photocell **114** and its corresponding light source, the resistance of the photocell **114** so shaded will increase. As seen in FIG. 3A, a Zener diode **180** is placed in series with a resistor **182** across a fifteen volt source of power. The junction of the resistor **182** and the Zener diode **180** is used to provide a source of relatively constant voltage for the circuit including the photocells **114** of the elevation photocell array **112**.

Since the circuits for each of the photocells **114** are identical, only two such circuits have been illustrated in FIGS. 3A and B, it being understood that there are twenty such circuits. The serial combination of the photocell **114** and a resistor **184** is connected to ground and to the junction of the Zener diode and the resistor **182**. The junction between the resistor **184** and the photocell **114** is coupled by a capacitor **186** to the cathode gate of a silicon controlled switch **188**. The cathode of the silicon controlled switch **188** is connected through a resistor **190** to ground while the anode thereof is connected through the coil **189** of a reed switch to the silicon controlled rectifier **172**. Additionally, the junction between the resistor **190** and the cathodes of the silicon controlled switches **188** is connected to the base of a transistor **192** which has its emitter connected to ground and its collector connected through the coil **194** of a reed switch which in turn is connected to the fifteen volt source of power. The reed switch coil **194** operates a set of contacts **194***a* which are normally open. When the reed switch coil **194** is energized, contacts **194***a* will be closed and connect one side of the set of contacts **194***a* to ground. The other side of the contacts **194***a* are connected to the clock **150** to issue the STOP signal referred to previously.

Operation of the circuit just described is as follows. When the photocells **114** are normally illuminated, they will have a very low resistance, and as a result, the potential applied to their associated capacitor **186** will be very small. However, when a ball passes through the space between the photocells **114** and their corresponding light source, one of the photocells **114** will be shaded; and as a result, its resistance will increase greatly and the voltage at the junction between the photocell **114** and the register **184** will increase substantially. This will cause the capacitor **186** to trigger the corresponding silicon controlled switch **188** and turn the latter on. As a result, current will flow through the silicon controlled switch **188** to energize the corresponding reed switch coil **189** which will close contacts associated therewith to provide elevation angle information in a manner to be seen hereinafter. It will be observed that no matter which one of the reed switch coils **189** is energized, current will be required to pass through the resistor **190** which is connected in series with the parallel combination of the reed switch coils **189**. As a result, there will be a voltage difference across the base nd the emitter of the transistor **192** which will cause the transistor **192** to conduct. When the transistor **192** conducts, the reed switch coil **194** will be energized to close the contacts **194***a* thereby stopping the clock **150**. Since the silicon controlled switch **188** will continue to conduct until its anode-cathode circuit is broken by means of the disabling of the fifteen volt power source in a manner to be described hereinafter which, as mentioned above, occurs during resetting of the computer, the reed switch coil **194** will continue to be energized to maintain the contacts **194***a* closed thereby keeping the clock **150** in a stopped condition until reset occurs, at which time the clock will also be reset.

The manner in which the clock **150** is reset will be described hereinafter in the description of a means for resetting the various computer systems.

DETERMINATION OF INSTANTANEOUS VELOCITY

Having obtained the initial velocity in the manner set forth in the previous section, it will be recalled from the discussion of the mathematics of the trajectory of a golf ball that it is necessary to compute the instantaneous velocity throughout the flight of the golf ball. This is accomplished by taking the output of the emitter follower **158** (FIG. 2) which, it will be recalled, is representative of the initial velocity and feeding it to a drag circuit which is illustrated in FIG. 4A. Specifically, the V_0 voltage quantity is fed through a calibration switch **200** (which is shown in a calibration position as opposed to a computing position) to an operational amplifier in a summing circuit **202**. The output of the amplifier circuit **202** is the instantaneous velocity V_1 although the amplifier **202** does not in itself perform any function in deriving V_1 other

than by summing the initial velocity V_0 with a feedback produced by the remainder of the drag circuit.

The output of the amplifier circuit **202** which is representative of the instantaneous velocity is fed to a voltage dependent resistor **204** which performs the function of squaring the instantanous velocity. From the voltage dependent resistor **204**, the signal is then taken to an operational amplifier in an inverting circuit **206**. The amplifier circuit **206** is connected in parallel with two circuit legs, the first of which includes a resistor **208** and the second of which comprises a resistor **210** and a plurality of diodes **212**.

It will be recalled that in the discussion of the drag factor, the drag coefficient varies depending upon the velocity of the ball. The arrangement is such that when the ball velocity is less than one hundred feet per second, only the leg including the resistor **208** will conduct. However, when the velocity is over one hundred feet per second, both the leg including the resistor **208** and the leg including the resistor **210** and the plurality of diodes **212** will conduct. In this respect, it will be recalled that the velocity is expressed as a voltage quantity and the arrangement of the resistor **210** and the diodes **212** is such that when the voltage quantity representative of velocity is equal or greater than that for one hundred feet per second, the breakover voltage of the plurality of the diodes **212** is exceeded and the leg in which they are included will conduct. In other words, the leg including the resistor **208** is arranged to provide a drag coefficient of about 0.50 for the situation in which the velocity of the ball is less than one hundred feet per second while both legs are arranged to provide a drag coefficient of about 0.21 when the ball velocity exceeds one hundred feet per second.

The junction of the two legs just described and the output of the amplifier circuit **206** is ultimately feed through a normally open contact **214***a* of a switch **214** which is closed during a computation process to an operational amplifier in an integrating circuit **216** which performs the integration indicated in Equation 1. The output of the amplifier circuit **216** is taken as a feedback to the input of the amplifier circuit **202** where it is summed with the initial velocity to complete the mathematics required by Equation 1. The switch **214** also includes a normally closed contact **214***b* which resets the amplifier circuit **216** by effectively shunting it whenever computation is not taking place. The operation of the switch **214** will be described in greater detail hereinafter.

Summarizing, the voltage dependent resistor **204** performs the squaring function of the instantaneous velocity while the elements **208**, **210** and **212** provide the introduction of the drag coefficient in the proper manner. The amplifier circuit **216** performs the integration, and the amplifier circuit **202** provides for the summing indicated by Equation 1. As a result of the foregoing construction, the instantaneous velocity V_i is obtained and is provided for use in other parts of the computer.

DETERMINATION OF THE INSTANTANEOUS VELOCITY IN THE Y DIRECTION

It will be recalled from the discussion of the mathematics of the trajectory of a ball flight that in order to obtain the instantaneous velocity in the Y direction, it is necessary to make a vector analysis of the components of the instantaneous velocity and that the instantaneous velocity in the Y direction (V_{iy}) is equal to the product of the instantaneous velocity and the sine of the angle of elevation, that is, $V_i \sin \theta$. As seen in FIG. 4B, the output of the amplifier circuit **202** which is representative of the instantaneous velocity V_i fed to an elevation trigonometry matrix **230** and one of the outputs thereof is the voltage quantity proportional to $V_i \sin \theta$.

Returning to FIGS. 3A and3B, the manner in which the quantity $V_i \sin \theta$ as provided by the elevation trigonometry matrix **230** is illustrated in detail.

It will be recalled from the discussion of the velocity determining circuit that whenever a golf ball breaks the beam of light passing from the light source to one of the photocells **114** of the elevation photocell array **112**, a coil **189** corresponding to the shaded one of the photocells **114** will be energized by virtue of the turning on of a corresponding silicon controlled switch **188**. Since the circuitry involving the reed switch coil per se is identical for each of the twenty reed switches **189**, each corresponding to one of the twenty photocells **114**, only the switch circuitry for the one degree of elevation photocell **114** is illustrated.

When one of the reed switch coils **189** is energized, it will simultaneously cause the closing of three normally open contacts **189***a*, **189***b* and **189***c*. The contact **189***a* is utilized in the circuit that provides the quantity $V_i \cos \theta$ while the contacts **189***b* and **189***c* are used in the circuits that provide information relative to the angle of elevation for the purposes of bounce and roll signal generation and for providing the quantity $V_i \sin \theta$ as will be described in greater detail hereinafter.

The circuitry associated with the contacts **189***a* includes an input in which the quantity V_i is received from the output of the summing amplifier **202** (FIG. 4*a*). The lead on which the V_i signal is received is designated **232** and includes a plurality of resistors having the values indicated. Resistors included in the lead up to the point **234** (FIG. 3B) are used for providing information relative to the cosine of θ, the angle of elevation, and the lead is continued through a plurality of additional resistors having the values shown until it is returned to ground at the point **236** (FIG. 3A). The resistors interposed between the points **234** and **236** are used for providing information relative to the sine of θ, the angle of elevation. As indicated in FIGS. 3A and 3B, the various tap points are provided between the resistors between the points **234** and **236** and are connected to various ones of the contacts **189***c* operated by the reed switch coils **189**.

Since the circuitry is shown schematically and the values of the resistances are indicated on the drawing, it is not believed necessary to describe specifically how the matrix operates to provide the quantity $V_i \sin \theta$. However, it will be apparent that since V_i is a voltage quatity, and the lead **232** is ultimately connected to ground at this point **236**, there will be a drop in the potential at each point between each resistance connected between the points **236** and **232** and that the voltage at each point may be sensed and fed to the rest of the system by means of the closing of a set of the contacts **189***a* or **189***c* in response to the photocell array **112** detecting a ball having a particular elevation. The values of the resistances between the points **234** and **236** are chosen such that the voltage representative of V_i applied at the point **232** will be diminished according to the sine of the particular angle involved thereby providing multiplication functions required to obtain the quantity $V_i \sin \theta$.

As a result of the above construction, it will be apparent that for any given one of the angles, the product of the instantaneous velocity and the sine of that angle is provided by the elevation trigonometry matrix **230**. In the event the path of the ball is such as to break the light beam to two adjacent ones of the photocells **114** as for example, a ball hit at 6° of elevation will cause the photocells **114** corresponding to 5° and 7° to ultimately energize the reed switch coils **189** for the 5° circuit and the 7° circuit. In such a case, it will be appreciated that the construction of the elevation trigonometry matrix **230** is such as to interpolate between the voltage values for 5° and the voltage values for 7° and thereby provide a quantity which is indicative of the sine function of 6°. From the foregoing, it is believed apparent how a voltage quantity corresponding to the quantity required by Equation 2 is obtained.

Elevation photocell lockout

It will be apparent from the foregoing that in order to accurately attain the quantities relative to $V_1 \sin \theta$, $V_1 \cos \theta$, and the function of θ for use in the bounce circuit that no more than two of the reed switch coils **189** should be energized for any given shot. The physical arrangement of adjacent ones of the photocells **114** with respect to each other is such that the golf ball alone can never affect more than two adjacent photocells **114**. However, there is a possibility that the golfer in following through with his swing will cause the club head to pass through the area between the light source and the elevation photocell array **112** thereby causing erroneous shading of one or more of the photocells **114** when such should not be the case. In order to prevent such an occurrence, means are provided for disabling the photocells **114** immediately after the ball has passed through the space between the light source and the elevation photocell array **112**.

It will be appreciated by those skilled in the art that a golf ball hit by a golf club will leave the tee area at a much faster rate than the golf club head that imparted the velocity to the ball. This factor is used to permit the system to be maintained energized for a period sufficiently long to measure the angle of elevation of the golf ball while precluding erroneous measuring due to the passage of the club head through the space between the light source and the elevation photocell array **112**.

It will be recalled that in the description of the velocity determining circuit, the voltage applied to the photocells **114** is derived from a circuit including the Zener diode **180**. By shunting the Zener diode, i.e. by connecting the juncture between the Zener diode **180** and the resistor **182** to ground, it will be apparent that each of the photocell circuits including the photocells **114**, the resistors **184** and the capacitors **186** will be deenergized such that they cannot turn on their associated silicon controlled switches **188**. In order to accomplish the shunting of the Zener diode, the transistor **192** which, it will be recalled, is utilized to issue the stop signal to the clock **150** whenever any one of the reed switch coils **189** is energized by its corresponding silicon controlled switch **188**, is included in a circuit for shunting the Zener diode.

A diode **231** is connected to the junction between the resistor **182** and the Zener diode **180** and the collector of the transistor **192**. The emitter-collector circuit of the transistor **192** is connected to ground. As a result, when a ball shades any one of the photocells **114** thereby causing the associated silicon controlled switch **188** to conduct and energize its associated reed switch coil **189**, the resultant turning on of the transistor **192** will immediately complete a circuit from the junction of the Zener diode **180** and the resistor **182** through the diode **231** to ground thereby causing the potential at the junction between the Zener diode **180** and the resistor **182** to be drawn downwardly to a value very nearly equal to ground potential. As a result, the potential at the juncture between each of the photocells **114** and its corresponding resistor **184** will be very nearly equal to ground potential and the capacitor **186** will not be able to turn on the corresponding silicon controlled switch **188** even if the photocell **114** is subsequently shaded by the head of a golf club.

Including the factors of gravity and lift

It will be appreciated from the foregoing discussion of the mathematics of the trajectory of a golf ball that the output quantity $V_1 \sin \theta$ from he elevation trigonometry matrix **230** neglects the factors of instananeous velocity in the Y direction that are due to lift and gravity. In order to add the effect of these factors, further mathematics need to be performed. This is due to the fact that gravity will always act in a strictly vertical direction while lift, which opposes gravity, acts in a direction normal to the flight of the ball and thus, will only act in a strictly vertical direction when the elevation angle is 0°. As a result, in order to vectorally add the quantites due to lift and gravity, it is necessary to resolve lift into a strictly vertically acting force or the resolve gravity to act in a direction normal to the path of the ball.

As mentioned previously in conjunction with FIGS. 3A and 3B, the resistors posed between the points **232** on which the voltage representative of V_1 is applied and the point **234**, and the various interconnections therebetween to the reed switch contacts **189***a* are utilized to provide a voltage quantity representative of the product of the instantaneous velocity and the cosine of the angle of elevation. It will be apparent that this quantity is provided by the elevation trigonometry matrix **230** in a way identical to that described above in conjunction with the provision of the quantity $V_1 \sin \theta$, the only difference being that the tap points for the contacts **189***a* are placed in a different manner in order to pick up voltage drops corresponding to a cosine function rather than a sine function.

It will also be appreciated that since the angle θ is measured with respect to the horizon, and since lift acts in a direction normal to the path of the golf ball, lift may be resolved into a force acting in a vertical direction merely by multiplying the force acting in a direction normal to the path of the ball by the cosine of the angle of elevation of the shot with respect to the horizon. In other words, lift may be resolved to be vectorally added with gravity by multiplying the force by the cosine of θ, the angle of elevation.

While lift is in actuality a force as opposed to a velocity, it has been found that it is generally proportional to the instantaneous velocity of the ball. Accordingly, the quantity $V_1 \cos \theta$ will be proportional to the force on the ball provided by lift and will act in a strictly vertical direction such that it may be vectorally added with the force of gravity.

Thus, the quantity $V_1 \cos \theta$ is taken from the elevation trigonometry matrix **230** (FIG. 4B) and applied to one end of a potentiometer **240** (FIG. 4A) which has its other end connected to ground. The wiper of the potentiometer **240** provides a tap for sensing a voltage quantity that corresponds to the force provided by lift in a strictly vertical direction.

This quantity is fed through a resistor to a point **242** where the force of lift is summed with the force of gravity. It will be apparent that the resistance provided by the potentiometer **240** and that interposed between the wiper of the potentiometer **240** and the point **242** in effect provides a multiplication factor for the quantity $V_1 \cos \theta$ which factor is equal to a constant (although it may be adjusted) so that the voltage applied at the point **242** due to the quantity $V_1 \cos \theta$ corresponds to a lift force which is proportional to the quantity $V_1 \cos \theta$ in the manner mentioned previously.

In order to introduce the effect of gravity, a voltage divider circuit, generally designated **244** is also connected to the point **242**. It will be apparent that this arrangement will supply a voltage corresponding to the force of gravity in that the force of gravity will be constant and without regard to the angle of elevation, the velocity of the ball or the angle with regard to the azimuth.

The voltages corresponding to lift and gravity are summed at the point **242** and fed through a switch **246** having a normally open contact **246***a* and a normally closed contact **246***b* to an operational amplifier in an integrating circuit **248**. The switch **246** is for the same purpose and operates identically as the switch **214**. Since the quantity at the point **242** is a force, before it may be combined with the velocity, it will be appreciated that it must be integrated and the amplifier circuit **248** performs this function. The output of the amplifier circuit **248** is then fed as an input into the bounce circuit, generally designated **250** (FIG. 4B) and, as will be seen hereinafter, normally passes therethrough in an unmodified form to a point **252**. It will be recognized that the voltage passed to the point **252** through the bounce circuit **250** at this time will correspond to the instantaneous

velocity in the Y direction due only to the factors of lift and gravity.

Returning now to the elevation trigonometry matrix **230**, (FIG. 4B), it will be seen that the output quantity $V_1 \sin \theta$ thereof is fed to an operational amplifier in an inverting circuit **254**. The output of the amplifier circuit **254** is then fed to the point **252** and as a result, the voltage at the point **252** will correspond to the sum of $V_1 \sin \theta$ and the velocity effect due to gravity and lift. This statement, of course, assumes that the ball has not yet, in its trajectory, intercepted the ground so as to activate the bounce circuit **250**. Should the latter have occurred, the factors of lift and gravity as provided by the elements **240–248** will not be provided at the point **252**, but rather a quantity provided by the bounce circuit **250** will be present.

In any event, the voltage at the point **252** will correspond to the instantaneous velocity of the ball in the Y direction at any point in the flight of the ball.

DISTANCE IN THE Y DIRECTION

It will be apparent that the velocity of the ball in the Y direction is a quantity that is basically immaterial to a golfer. However, the golfer is interested in the distance or displacement of the ball in the Y direction. That is, the golfer would like to know how high above the ground the ball is traveling, and even more particularly, the golfer would like to observe the variation in such height at all times during the flight of the ball.

As mentioned previously, the instant invention contemplates the use of a ball spot projector for projecting a spot of light on a screen that also bears a scene representative of what the golfer would see from a particular point on a golf course. By appropriately moving the spot of light on the projected scene, a very realistic simulation of the ball in flight relative to the environment on the golf course may be provided. Of course, it will be appreciated that the spot must be moved in the Y direction not according to the velocity in the Y direction, but rather, according to the distance in the Y direction. Therefore, the voltage at the point **252** is fed through a switch **256** to an operational amplifier in an integrating circuit **258**. The switch **256** has a normally open contact **256***a* and a normally closed contact **256***b* and is operated in a manner similar to the switch **214** to reset the integrating amplifier **258**.

As a result, the total instantaneous velocity in the Y direction is integrated to provide signals representative of the instantaneous distance or displacement in the Y direction, S_y. Accordingly, the output of the amplifier circuit **258** provides the quantity indicated in Equation 8. This output is fed through a switch **260** having a normally open contact **260***a* and a normally closed contact **260***b*, is designated S_y in FIG. 4B and is generally negative in polarity due to the presence of the inverting circuit **254**. As will be seen, this output signal is utilized in the ball spot projector for controllng the position of the ball spot on the scene with respect to the vertical.

DETERMINATION OF INSTANTANEOUS VELOCITY IN THE Z DIRECTION

From Equation 4 above, it will be apparent that the instantaneous velocity in the Z direction V_{i_z} is equal to the product of the instantaneous velocity, the cosine of θ (the angle of elevation) and the cosine of B (the angle with respect to the azimuth). Here it will be recalled that the elevation trigonometry matrix **230** provides an output signal representative of the product of the instantaneous velocity in the cosine of θ. Accordingly, all that is required in order to obtain the quantity $V_1 \cos \theta \cos B$ is to multiply the $V_1 \cos \theta$ output of the elevation trigonometry matrix by the cosine of B. Of course, the angle B must be determined before this function may be performed.

As mentioned earlier in conjunction with FIG. 1, the path of the ball from the tee point **104** is sensed by the azimuth photocell array **124** which includes photocells **128**. The azimuth photocell array **124** provides angle information to the azimuth trigonometry matrix **270** (FIG. 4B) and this matrix utilizes such information together with the quantity $V_i \cos \theta$ received from the elevation trigonometry matrix **230** and operates to perform the multiplication performed above. In essence, the azimuth trigonometry matrix **270** has a first output on which a signal representative of the quantity $V_i \cos \theta \cos B$ is provided for use in determining various quantities relative to the Z or distance axis and a second output for a signal representative of the quantity $V_i \cos \theta \sin B$ which is used in making determinations relative to the X axis. The latter output will be described in greater detail hereinafter.

The signal $V_i \cos \theta$ from the elevation trigonometry matrix **230** is first passed through a conventional operational amplifier in a driving and inverting circuit **272** to the azimuth trigonometry matrix **270**. As seen in FIG. 5A, the output from the amplifier circuit **272** is received on a lead **274** which is connected through a plurality of resistors having the values indicated to a point **276**. Various taps are taken between the resistances and passed to reed relays **278** each of which has four sets of contacts. Since the internal construction of each of the reed relays **278** is identical, only one has been illustrated. The four contacts of each reed relay **278** include contacts **278***a*, **278***b*, **278***c* and **278***d*. The contacts **278***a* serve to close circuits between the resistors interposed between the lead **278** and the point **276** to provide a signal representative of the quantity $V_i \cos \theta \cos B$. Of course, it will be appreciated that only a selected one or at most two of the reed relays **278** are energized after any given shot so as to provide the cosine function of but a single selected angle.

From the point **276**, a plurality of resistors having the values indicated are returned to ground at a point **280**. Between the various resistors, tap points are taken and are connected in the manner indicated with the contacts **278***b* of the reed relay **278** to provide a signal representative of the quantity $V_i \sin \theta \cos B$.

The manner of energizing a selected one of the reed relays **278** is as follows. Since the circuitry for each reed relay **278** is substantially identical, only the actuating circuitry for the seventh reed relay from the left as seen in FIG. 5A is illustrated, it being understood that similar circuitry is provided for each of the fifteen reed relays **278**. One side of the coil of each reed relay **278** is connected in common to a +15 volt source of power which may be deactivated when it is desired to reset the computer as will be described. The other side of a reed relay coil **278** is connected to the anodes of two silicon controlled rectifiers **282**L and **282**R. It will be recalled that the azimuth photocell array **124** comprises forty-six photocells **128**, twenty-three photocells **128** being arranged on each side of a line representing a theoretical straight shot. Since the angle with regard to the azimuth, B, is measured to either side of the line representing the theoretical straight shot, the azimuth trigonometry matrix **270** may be materially reduced in size by allowing any given reed switch **278** to be energized in two different ways, i.e. (1) when the ball passes to the left of the theoretical straight shot line by the corresponding angle said (2) when the ball passes to the right of the theoretical straight shot line by the corresponding angle. Thus, the silicon controlled switch **282**L serves to actuate the corresponding reed relay **278** when the shot passes to the left of the theoretical straight shot line while the silicon controlled switch **282**R provides the same function when the ball passes to the right of the theoretical straight shot line.

The cathode of the silicon controlled switch **282**L is connected through a resistor **284**L to ground while the cathode of the silicon controlled switch **282**R is connected through a similar resistor **284**R to ground. Thus, it will

be apparent that when either one of the silicon controlled switch **282**L or **282**R is turned on, the corresponding reed relay **278** will be energized.

In order to turn on the silicon controlled switches, the photocells **128** are utilized. For the photocells **128** to the left of the theoretical straight shot line, one source of power is provided while a second source of power is provided for the photocells **128** to the right of the straight shot line. The power supplying arrangement for both is identical and includes a resistor **286** connected in series with a Zener diode **288** between the 15 volt source of power mentioned above and ground. The junction between the Zener diode **288** and the resistor **286** is utilized to provide a relatively constant voltage source of power for the circuits including the photocells **128** which are identical to those described in conjunction with the elevation trigonometry matrix **230**. As a result, when one of the photocells **128** is shaded, it will turn on its associated silicon controlled switch to energize the corresponding reed relay **278**.

Distinguishing left and right

In order to distinguish whether the shot passed to the left or to the right of the theoretical straight shot line, the junction beween the silicon conrolled switch **282**R and the resistor **284**R is connected to the base of a transistor **290**R while the junction between the resistor **284**L and the silicon controlled switch **282**L is similarly connected to the base of the transistor **290**L. The emitters of both of the transistors **290**L and **290**R are connected directly to ground while the collectors thereof are connected through respective diodes and in series with a reed switch **292** which is connected to the above mentioned source of 15 volt power. As a result of this construction, it will be apparent that when any one of the silicon controlled switches **282**L is turned on by its associated photocell **128**, the transistor **290**L will begin to conduct while if any one of the silicon controlled switches **282**R is turned on by its associated photocell **128**, the transistor **290**R will begin to conduct. In any event, the reed switch **292** will be energized to close a set of contacts **292***a* which have one side thereof connected to ground.

The collector of the transistor **290**L is also connected through a diode **296**L to the coil of a reed relay **298**L, the other side of which is connected to the above mentioned 15 volt source of power. Similarly, the collector of the transistor **290**R is also connected through a diode **296**R to the coil of a similar reed relay **298**R. Thus, whenever the transistor **290**L is caused to conduct, it will be apparent that the reed relay **298**L will be actuated and similarly, when the transistor **290**R is caused to conduct, the reed relay **298**R will be energized. The reed relay **298**L is utilized to inform the remainder of the computing system when a ball has passed to the left of the theoretical straight shot line while the energization of the reed relay **298**R provides the same function when the ball has passed to the right of the theoretical straight shot line.

For the purpose of clarity in the illustration of FIGS. 5A and 5B, certain details have been omitted. For example, the anode gates of the silicon controlled switches **282**L and **282**R are returned through a resistor to the above mentioned 15 volt source of power. Similarly, while there are 23 photocells to either side of the theoretical straight line shot, only 15 reed relays **278** are shown. In fact, it has been determined that only 15 are required and the arrangement is such as to provide a measurement of up to about 20 degrees of deviation from the theoretical straight shot. Eight additional photocells are provided on either end of the elevation photocell array **124** and are connected in parallel with the respective right and left side photocells **128** associated with the rightmost reed relay **278** shown in FIG. 5B. As a result of this construction, any ball passing over the extreme right-hand side or the extreme left-hand side of the azimuth photocell array **124** such that it shades one or two of the photocells in each group of eight is arbitrarily assigned an azimuth angle of 20 degrees. While this feature may detract somewhat from accuracy, it will be apparent to those skilled in the art, that a golfer will seldom hit a shot deviating more than 20 degrees from the intended line of the shot, and thus the elimination of a number of resistors and reed relays gained by this arrangement provide a significant economical advantage while detracting very little from the accuracy of the game.

Azimuth photocell lockout

The other side of the contacts **292***a* are connected through respective diodes **294** to respective ones of the junctions between the resistors **286** and the diodes **288**. Thus, a lockout system similar to that described in conjunction with the elevation angle determining means is provided for deenergizing all of the photocells **128** immediately after any one of the photocells **128** is shaded by the passing of a ball such that it cannot subsequently energize a corresponding reed relay **278** due to the passage of a golf club through the space between the light source and the azimuth photocell array **124**.

In summary, the quantity $V_i \cos \theta$ is provided to the azimuth trigonometry matrix **270** by the elevation trigonometry matrix **230** and is combined with the function of the angle with regard to the azimuth so as to produce the quantity $V_i \cos B \cos \theta$ which is representative of the instantaneous velocity in the Z direction. The selection of the particular cosine value is governed by actuation of a selected one or perhaps two of the reed relays **278** by the shading of the corresponding photocells **128** in the azimuth photocell array **124**. An indication of whether the shot was to the left or to the right of the theoretical straight line shot is provided by the reed relays **298**L and **298**R.

DISTANCE IN THE Z DIRECTION

The quantity $V_i \cos \theta \cos B$ which has been determined in the manner indicated above is of little moment to the golfer as it merely represents the velocity in the Z direction. However, the golfer is interested in the distance or displacement from the tee in the Z direction, and it will be appreciated from the foregoing mathematical discussion that this quantity may be obtained at any instant during the flight of a ball by integrating the instantaneous velocity in the Z direction as indicated in Equation 9 above.

Thus, the output signal $V_i \cos \theta \cos B$ is taken from the azimuth trigonometry matrix **270** (FIG. 4B) and passed through a switch **298** having a normally open contact **298***a* and a normally closed contact **298***b* and which is operated in a manner similar to the switch **214** to a conventional operational amplifier in an integrating circuit **300**. The amplified circuit **300** performs the required integration of the quantity $V_i \cos \theta \cos B$ and the output thereof is fed through a switch **301** having a normally open contact **301***a* and a normally closed contact **301***b* to provide a signal proportional to the negative of the distance in the Z direction. In other words, the voltage quantity passed by the switch **301** is $-S_z$. The purpose of this signal and the switch **301** will be described in greater detail hereinafter.

The output of the amplifier circuit **300** is also fed as an input to an operational amplifier in an inverting circuit **302** and the output of the latter is fed through a switch **303** having a normally open contact **303***a* and a normally closed contact **303***b* to provide a signal having a magnitude proportional to the distance in the Z direction. The purpose of the switch **303** is similar to the purpose of the switch **301** and will be discussed in greater detail hereinafter.

From the foregoing, it will be apparent that the system provides two signals, one of which is proportional to the distance in the Z direction and the other of which is nega-

tive of the first signal. These signals are utilized in controlling the ball spot projector and map spot projector in a manner to be described in greater detail hereinafter. Additionally, the output from the amplifier circuit **302** may be used to drive a suitable meter **304** calibrated in terms of yards to provide an immediate indication to a golfer of the distance that the shot traveled in the Z direction.

DETERMINATION OF INSTANTANEOUS VELOCITY IN THE X DIRECTION

From the foregoing discussion of the mathematics of the trajectory of a flight of a golf ball, it will be apparent that the instantaneous velocity in the X direction basically follows the Equation 3 above. That is, the instantaneous velocity in the X direction V_{i_X} is equal to the product of the instantaneous velocity, the cosine of the angle of elevation and the sine of the angle with regard to the azimuth. Of course, this does not take into account the factor on velocity in the X direction introduced by side spin that would tend to cause the ball to hook or slice.

It will be recalled from the discussion of the determination of the instantaneous velocity in the Z direction that the azimuth trigonometry matrix **270** not only provides an output signal representative of the instantaneous velocity in the Z direction, but also is arranged to provide an output representative of the product of the quantity $V_1 \cos \theta$ which is applied as an input thereto and the sine of B, the angle with regard to the azimuth.

As illustrated in FIG. 4B, the lead on which a $V_1 \cos \theta \sin B$ signal is provided is first run to an operational amplifier in an inverting circuit **350**. The output from the amplifier circuit **350** is in turn fed to a second similar amplifier in an inverting circuit **352**. As will be explained in greater detail hereinafter, the amplifier circuit **352** is sometimes bypassed depending upon whether the golf ball passed to the right or to the left of the theoretical straight shot line. To this end, taps are taken from points **354** and **356** on either side of the amplifier circuit **352** to circuitry for bypassing the amplifier circuit **352**. Such circuitry will be explained in greater detail hereinafter.

The point **356** is connected through the circuit elements indicated in FIG. 4B to a point **358** which serves as a summing point for the voltage quantities representative of the instantaneous velocity in the X direction due solely to the initial direction of the shot and the voltage quantity representative of instantaneous velocity in the X direction due solely to hook or slice spin placed on the ball.

Including the effect of spin

Referring now to FIG. 4A, it will be recalled that the output of the amplifier circuit **202** is a voltage quantity representative of the instantaneous velocity at any time during the flight of the golf ball. The output of the amplifier circuit **202**, for the purposes of providing a voltage quantity representative of the effect of spin, is fed to a series voltage dependent resistive circuit comprised of a first voltage dependent resistor **370** and a second voltage dependent resistor **372**. The output of the second voltage dependent resistor **372** is fed to the base of a transistor **374** having its collector connected to a −15 volt source of power and its emitter connected to a hook-slice matrix, generally designated **380** and illustrated in FIG. 4B.

The effect of the voltage dependent resistor circuit is such as to provide a voltage level at the hook-slice matrix **380** that is generally on the order of the third power of the instantaneous velocity although not strictly such. In this respect, it has been found that such a voltage level insures relatively accurate spin signals for low initial velocities which may not be obtainable if, say, only the instantaneous velocity was applied to the hook-slice matrix **380**.

As shown schematically in FIG. 4B, the spin detector **110** also provides information to the hook-slice circuit **380**. As seen in FIG. 6, the spin detector **110** is comprised of a printed circuit, generally designated **400** that is formed of thirty conductive segments, not all of which are shown. The printed circuit **400** is illustrated in scale in FIG. 6 in a planar condition although when it is embodied in the spin detector **110**, it is generally concave and has an upper end **402** and a lower end **404**. Additionally, a nonconductive center line **406** is provided. The layout of the printed circuit **400** is symmetrical on either side of the center line **406** and thus only one side is illustrated.

Specifically, the side of the printed circuit **400** that detects hook spin is shown in FIG. 6. The fifteen conductive segments to the left of the center line **406** are designated **1H–15H**, inclusive, from right to left and there are fifteen corresponding segments to the right of the center line **406** designated **1S–15S**, inclusive, from left to right.

Referring now to FIG. 7, the shape of the curve in which the printed circuit **400** is configured is illustrated. A pair of forms **408**, only one of which is shown, are used to maintain the printed circuit **400** in precisely the contour illustrated. The upper end **402** of the printed circuit **400** is disposed at the upper left-hand end of form **408** while the lower end **404** of the printed circuit **400** is disposed at the upper right-hand end of the form **408** as seen in FIG. 7.

The forms **408** additionally support a layer of insulating material **410** which in turn support a plurality of electrically conductive tapes **412** at a position just above the printed circuit **400**. Specifically, the spacing is such that the tapes **412** are just out of contact with the printed circuit **400** but may be deflected to make contact with the printed circuit **400** when struck by a golf ball rebounding from the ellipsoidal shell **108**.

It will be appreciated from FIGS. 6 and 7 that the conductive tapes **412** span the printed circuit **400** in a direction generally transverse to the center line **406** of the latter. The tapes **412** are spaced from each other in the distance ratios indicated in FIG. 7, which is a scale drawing.

While not all of the tapes **412** are illustrated, the forms **408** may support a total of forty-one tapes. Each of the forty-one tapes **412** may have its ends secured to suitable screws **414** that are received in nuts **416** associated with apertures **418** disposed in the sides of the forms **408**. Additionally, outwardly projecting pins **420** may be arranged to aid in maintaining the spacing of adjacent tapes **412** by means of an abutting contact therewith near the strip of insulating material **410**.

The physical orientation of the forty-one tapes **412** with respect to each other has just been described. The electrical relation between the tapes is as follows. Starting from left to right, the first nine of the tapes **412** are elecerically tied together and have an output lead designated **A1**. The tenth through nineteenth tapes **412** each have a corresponding output lead designated **A2–A11**, inclusive. The twenty and twenty-first tapes **412** are electrically tied together and have a single output lead designated **A12** while the twenty-second and twenty-third tapes are similarly tied together to provide a single output **A13**. Similarly, the twenty-fourth and twenty-fifth tapes are tied together to produce an output **A14**; the twenty-sixth and twenty-seventh tapes are tied together to provide an output **A15**; the twenty-eighth and twenty-ninth tapes are tied together to produce the single output **A16** and the thirtieth and thirty-first tapes are tied together to provide a single ouput **A17**. The thirty-second through forty-first tapes, inclusive, are not used in the instant invention and may be eliminated if desired or, alternatively, tied together into a common connection to ground to reduce spurious capacitive affects.

From the foregoing, it will be apparent that a ball rebounding from the shell **108** to the spin detector **110** will cause one of the tapes to contact the printed circuit. Depending upon the location on the spin detector **110** at

which the ball hits, various combinations of the outputs A1–A17 and the outputs 1H–15H may be obtained. This information is then provided to the hook-slice matrix 380.

The hook-slice matrix 380 is illustrated in FIG. 8 and includes a first input 430 that is connected to the emitter of the transistor 374 illustrated in FIG. 4A. This input is run through a string of resistors as illustrated and connected to ground at a point 432. At various tap points between the resistors interposed in the line between the points 430 and 432 are a plurality of contacts 434*a* operated by corresponding reed switch coils 434. Each of the reed switch coils 434 have a common connection to a source of power and are included in the anode-cathode circuit of corresponding silicon controlled switches 436. Specifically, seventeen reed relays 434 are provided, each having an associated silicon controlled switch 436. Since the circuitry for each of the silicon controlled switches 436 is identical, only one is illustrated and described.

A Zener diode 438 has its cathode connected through a resistor to the source of power which may be interrupted when the computer is reset. The cathode of the Zener diode 438 is connected to ground. The anode of the Zener diode 438 is also connected through a resistor to a junction between a capacitor 440 and an input for receiving the A1 signal generated by the corresponding tapes in the spin detector 110.

The capacitor 440 is, in turn, connected to the cathode gate of the silicon controlled switch 436. The anode of the silicon controlled switch 436 is connected to a corresponding one of the reed switch coils 434 while the cathode thereof is connected through a resistor 442 to ground.

The leads 1H–15H and 1S–15S are connected as follows. Specifically, thirty silicon controlled switches 450 are provided. Since each circuit is identical, only the silicon controlled switch 450 associated with the lead 15S will be described. The cathode of the silicon controlled switch 450 is connected through a resistor 452 to ground and through a second resistor 454 to the lead 15S. The lead 15S is also connected directly to the cathode gate of the silicon controlled switch 450 while the anode of the silicon controlled switch 450 is connected through an associated reed relay coil 456 which operates a set of contacts 456*a* to the cathode of the silicon controlled rectifier 172 (FIG. 2).

A transistor 458 has its emitter connected to ground and its base connected to the junction of the two resistors 452 and 454. The collector of the transistor 458 is returned through a reed switch coil 460 to power. The junction between the resistor 454 and the resistor 452 is connected to the cathode of each of the silicon controlled switches 450 such that when any one is turned on by means of an appropriate signal being applied to its cathode gate, the voltage drop across the resistor 452 will turn on the transistor 458 to energize the reed switch coil 460 for such purposes as will be seen hereinafter. Additionally, the turning on of one of the silicon controlled switches 450 will also energize its associated reed switch coil 456 thereby causing the associated contact 456*a* to be closed.

Each of the thirty reed relay contacts 456*a* have a common connection to an output on which a voltage level representative of the force due to spin will be present. Additionally, the contacts 456*a* are connected through interpolating resistors to various junctions of a resistor matrix extending between points 462 and 464. The point 464 is connected to ground while the point 462 is connected in common to each of the reed relay contacts 434*a*. Thus, when any one of the silicon controlled switches 450 is turned on, the energization of its associated reed switch 456 will cause the tapping of a particular point in the resistor matrix extending between the points 462 and 464 to sense the voltage thereat and provide such a voltage as a quantity indicative of the force due to spin.

The junctions of each of the resistors comprising the resistive matrix extending between the points 462 and 464 are also taken as taps through interpolating resistors having the values indicated to the azimuth trigonometry circuit 270. The various tap points are designated E1–E30, the odd numbered tap points being assoicated with slice and the even numbered tap points being associated with hook. Referring specifically to FIGS. 5A and 5B, the manner in which the tap points E1–E30 are connected is indicated. It will be recalled that the contacts 278*c* and 278*d* of the reed relay 278 associated with the azimuth trigonometry matrix are used in conjunction with spin determination, the contacts 278*c* of each of the reed relays 278 being associated with the reed relay 298L and the contacts 278*d* of each relay 278 being associated with the reed relay 298R. The spin circuit contacts of the reed relays 298L and 298R are connected in common to provide a SPIN COMMON signal as indicated in FIG. 5A.

Returning now to FIG. 4B, the SPIN COMMON output from the azimuth trigonometry matrix 270 is fed as an input to an operational amplifier in an inverting circuit 480. The output of the amplifier circuit 480 is connected to a point 481 which, in turn, is connected through a 100K resistor to the SPIN FORCE output of the hook-slice system 380. The point 481 is in turn connected through a switch 482 to a conventional operational amplifier in an integrating circuit 483 where the spin force signal is integrated to provide a velocity quantity.

The point 481 is also connected through normally closed contacts 460*a* operated by the relay 460 to ground. It will be recalled that the relay 460 is energized whenever one of the silicon controlled switches 450 is turned on. Thus, whenever a ball has encountered the spin detector 110 in such a way to turn on one of the silicon controlled switches 450, the contacts 460*a* will be opened. On the other hand, if for some reason the contact of a ball with the spin detector 110 is such as to fail to turn on one of the silicon controlled switches 450, the point 481 will be connected to ground which will correspond to a spin force of zero so that, in essence, the factor of spin will not be included in computation. This circuitry insures that the factor of spin will be introduced into the computer only when spin data is available.

The output of the amplifier circuit 483 is, in turn, fed through an adjustment potentiometer to the point 358 which serves as a summing point for the voltage quantity representative of the instantaneous velocity in the X direction due solely to initial direction of the shot and the voltage quantity effecting velocity in the X direction due to hook or slice spin.

Spin detector lockout

A transistor 444 (FIG. 8) has its collector connected to the anode of the Zener diode 438 while its emitter is connected directly to ground and its base is connected to the junction between the cathode of the silicon controlled switch 436 and the resistor 442.

This junction is common to each of the silicon controlled switches 436. Thus, when any one of the silicon controlled switches 436 is turned on by an appropriate input applied by the capacitor 440 to its cathode gate, its associated reed switch coil 434 will be energized to close the associated contacts 434*a* and current will flow through the resistor 442 producing a voltage drop thereacross to turn on the transistor 444 and effectively shunt the Zener diode 438 such that spurious signals due to the bouncing of a golf ball for a second or third time upon the spin detector 110 will not trigger additional ones of the silicon controlled switches 436.

DETERMINATION OF DISTANCE IN THE X DIRECTION

The point 358 is in turn connected through a switch 484 (FIG. 4B) to an operational amplifier in an integrat-

ing circuit **485** which integrates the total instantaneous velocity in the X direction due to both spin and initial direction to provide a voltage level on its output representative of the displacement or distance in the X direction, S_x, which is fed through a switch **486** to the remainder of the system as will be seen.

The switches **482**, **484** and **486** have normally open contacts **482***a*, **484***a* and **486***a* and normally closed contacts **482***b*, **484***b*, and **486***b* and are operated in a manner similar to the switch **214**.

From the foregoing, it will be appreciated how a voltage quantity representative of S_x will be obtained. It will also be recalled that the displacement or distance in the X direction is measured from the theoretical straight shot line, and thus, the voltage representing the quantity S_x could be either positive or negative depending upon the side of the straight shot line from which it is to be measured. The proper change in the polarity of the quantity S_x may be suitably manipulated by control of one of the inverter circuits **350** and **352**. That is, if one of the inverter circuits is left in the line, the S_x quantity will have one polarity while if that inverter circuit is cut out of the line, the voltage quantity S_x will have the opposite polarity. Specifically, the inverter circuit **352** is cut into or dropped out of the line for this purpose.

It will be recalled that leads are taken from the points **354** and **356** for the purpose of dropping the inverter **352** out of the line when and if required. The two leads just mentioned are taken to a set of contacts associated with the reed relay **298L** of the azimuth trigonometry matrix and illustrated in FIG. 5A. It will be recalled that the contacts of this relay are closed when the system detects that the shot has gone to the left of the theoretical straight line in the manner described in conjunction with the azimuth trigonometry circuit. Accordingly, whenever the system detects that a ball has traveled to the left of the theoretical straight shot line, the reed relay **298L** will be energized and will shunt the inverter **352** to drop the latter out of the circuit. On the other hand, when a shot has traveled to the right of the theoretical straight line, the reed relay **298L** will be deenergized and as a result the inverter **352** will be in the circuit. Thus, as the result of the just described construction, the polarity of the voltage level representative of S_x is appropriately controlled in a manner dependent upon the initial flight of the ball and will be positive for a shot to the left of the theoretical straight shot line or negative for a shot to the right of the theoretical straight shot line.

INTRODUCING BOUNCE

The bounce and roll circuitry **250** shown in the form of a block in FIG. 4B is illustrated in schematic form in FIG. 9. As mentioned previously, normally the bounce and roll circuitry is cut out of the circuit for determining distance in the Y direction. However, when the distance in the Y direction is equal to zero for the first time after the ball was initially struck from the tee area by a golf club, the bouncing of the ball will begin. Accordingly, a means is provided for sensing when the Y distance S_y is equal to zero. Specifically, the S_y signal from the main computer is fed as an input through a manually operable switch **487** to a Darlington connected emitter follower generally designated **488**. There is also provided a second Darlington connected emitter follower generally designated **489** and the coil **490** of a micropositioner is connected between the two emitter followers to provide a means for sensing a difference in the conductive states of the two emitter followers. The arrangement may be considered to be that of a differential amplifier.

The base of one of the transistors comprising the emitter follower **489** is connected to a manually movable wiper of a potentiometer **491** which is used to set the degree of conduction of the emitter follower **489**. The arrangement is such that when the voltage representative of the Y distance S_y goes positive with respect to the voltage at the wiper of the potentiometer **491** within the limits of sensitivity of micropositioner **490**, the latter will be energized to complete a circuit between contacts **490***a* and **490***b* thereof.

Normally, the voltage representative of S_y will be at ground potential when the Y distance is zero. Because of the inability of the micropositioner **490** to sense extremely small differences in potential applied thereacross by the emitter followers **488** and **489**, in order to set the level at which the micropositioner **490** will be energized to close the circuit between contacts **490***a* and **490***b* thereof, the switch **487** is connected through a contact thereof to ground. This will correspond to an input to the emitter follower **488** of a Y distance equal to zero, and at this point, the wiper of the potentiometer **491** is slowly adjusted until sufficient current is flowing through the micropositioner **490** to close the circuit between the contacts **490***a* and **490***b* thereof.

In order to connect the contacts **490***a* to a source of power, a relay **492** must be energized to close contacts **491***a* thereof. Specifically, when a valid trigger is detected in the manner previously described, power is applied from the silicon controlled rectifier **172** (FIG. 2) to an RC circuit including a resistor **493** and a capacitor **494** such that when the capacitor acquires a certain charge, a unijunction transistor **495** will be fired to cause the relay **492** to be energized. The resultant energization of the relay **492** will close the contacts **492***a* thereof to apply power to the contacts **490***a*. The time delay in the energization of the relay **492** is provided to permit complete data acquisition and the initiation of computation so that the initial Y distance of zero before data is acquired will not cause premature energization of the bounce circuitry.

When the system has been adjusted in the manner previously described, and is in operation, and the voltage applied to the emitter follower **488** corresponds to a Y displacement of zero and power is applied to the contact **490***a* of the micropositioner **490**, the resultant closing of the circuit between the contacts **486***a* and **486***b* will apply power to a relay **490**. The energization of the relay **496** will in turn cause the closing of normally open contacts **496***a* thereof which in turn will apply power to a relay **497**. The energization of the relay **497** will in turn close contacts **497***a* thereof which perform the dual function of holding the relay **497** in an energized condition and applying power on the bounce leads to the elevation trigonometry matrix **230**.

The energization of the relay **497** additionally opens normally closed contacts **497***b* thereof to disconnect the lift and gravity circuits described previously from the Y direction circuit. Similarly, normally open contacts **497***c* are closed by the relay **497** to place the bounce gravity circuit in the Y direction circuit. Finally, normally closed contacts **497***d* which are arranged to shunt a capacitor **498** are opened.

The power applied to the elevation trigonometry matrix **230** is returned via selected ones of the resistors involved in the bounce circuit thereof and applied to the capacitor **498**. In this respect, the resistors in the bounce circuitry of the elevation trigonometry matrix **230** are chosen such that the smaller the angle of initial elevation of the shot, the lower the voltage applied to the capacitor **498**.

In any event, the application of voltage to the capacitor **498** results in the charging of the latter. The charge on the capacitor **498** is periodically sensed by a unijunction transistor **499** through normally open contacts **496***b* operated by the relay **496**. When the charge on the capacitor **498** has reached a predetermined value and the contacts **496***b* are closed by the relay **496**, the unijunction transistor **499** will be fired to energize a relay **500**. As will be explained in greater detail hereinafter, the energization of the relay **500** marks the termination of the flight of the ball including the bounce portion thereof.

Returning to the contacts **497***b* and **497***c*, it will be apparent that when the contacts **497***b* are opened and the

contacts **497***c* are closed, the bounce portion of the flight of the ball is taking place. Since the opening of the contacts **497***b* cuts out the gravity circuit used during the pre-bounce portion of the ball flight, it will be apparent that the effect of gravity during bounce must be provided by some other means. To this end, a resistor **501** is placed in series with a plurality of diodes **502** between a negative source of power and ground. At the junction between the diodes **502** and the resistor **501**, a tap is taken and applied to a capacitor **503** which is then returned to ground through a resistor having the value designated. Normally open contacts **496***c* operated by the relay **496** are arranged to shunt the capacitor **503** at such times that will become apparent hereinafter.

Each time that a Y distance of zero is detected, velocity due to gravity from any source is temporarily dropped out of the system either by the opening of the contacts **497***b* or the shunting of the capacitor **503** by the contacts **496***c* as will be described in greater detail hereinafter. As a result, the only velocity component applied to the amplifier circuit **258** (FIG. 4B) is that represented by the quantity $V_i \sin \theta$, and as a result, the integration process performed by the amplifier circuit **258** will begin anew from the time at the first bounce and the voltage quantity representative of the distance in the Y direction S_y will begin to increase in the negative direction.

With the increasing negative voltage representative of S_y, the micropositioner **490** will be deenergized thereby breaking the circuit between the contacts **490***a* and **490***b* to deenergize the relay **496**. However, at this time the relay **497** will remain energized by means of the holding contacts **497***a* thereof.

The deenergization of the relay **496** will cause the contacts **496***c* to revert to their normally open state and the capacitor **503** will begin to charge. As the capacitor **503** begins to charge, it will be apparent that an increasing negative voltage will be applied from the bounce circuit to the point **252** in an asymptotic fashion to be summed with the decreasing negative voltage representing the quantity $V_i \sin \theta$ at the point **252**.

At some time, the sum of the two voltages, which represent Y velocity, will peak out and the distance in the Y direction will again begin to diminish until the Y distance S_y is again equal to zero. At this point, the micropositioner **490** will again conduct to ultimately energize the relay **496** which will close the contacts **496***c* to shunt the capacitor **503** thereby eliminating any effect of velocity in the Y direction due to gravity. Simultaneously, the contacts **496***b* will be closed; and if during the time from the first bounce to the second bounce is represented by the first S_y is equal to zero intercept until the second S_y is equal to zero intercept, the charge buildup on the capacitor **498** is sufficient to trigger the unijunction transistor **499**, the relay **500** will be fired to stop any further generation of bounce signals. On the other hand, if the charge on the capacitor **498** is not sufficiently high so as to trigger the unijunction transistor **499**, the generation of bounce signals will continue such time as the charge on the capacitor **498** has reached a predetermined value whereupon the process will stop.

As will be apparent to any golfer, when a golfer hits a high velocity low angle shot, the bouncing of the ball will continue for a substantial time. It will be recalled that the voltage applied to the capacitor **498** for charging the same is proportional to the angle of elevation. Thus, for a low skimming shot, the capacitor **498** will not charge as rapidly as would be the case for a high angle shot so that the process of generating the bounce signals will continue through perhaps as many as fifteen S_y is equal to zero intercepts which will be perceptible as an apparent roll rather than discrete bounces.

A golfer will also recognize that for an extremely high shot such as that hit by a nine iron or a wedge, the ball will bounce very little if at all. In this respect, for a high angle shot, the resistances in the bounce circuit of the elevation trigonometry matrix **230** are chosen such that a voltage sufficiently high to trigger the unijunction transistor **499** will be applied immediately upon the first S_y is equal to zero intercept, during which time it will be recalled that the contacts **496***b* are closed, so that the relay **500** will be energized immediately to preclude the issuance of bounce signals. For medium elevation shots, a voltage intermediate that applied to the capacitor **498** for low angle shots and that applied directly to the unijunction transistor **499** for high angle shots will be applied to the capacitor **498** and because the voltage is somewhat higher than that for low angle shots, it will be appreciated that the capacitor **498** will charge to the predetermined value in a shorter amount of time thereby minimizing the number of bounces.

From the foregoing description, it will be appreciated that the charge on the capacitor **498** will be sensed by the unijunction transistor **499** only when a Y distance of zero condition exists in that the relay contacts **496***b* are closed only in response to the existence of such a condition. This feature precludes the firing of the unijunction transistor **499** to terminate the bounce cycle at any time when the ball would theoretically be above the ground. In other words, the circuit arrangement is such that the bounce cycle can only be terminated when the ball is theoretically in contact with the ground as evidenced by the existence of a Y distance of zero condition.

Increasing the decay rate of instantaneous velocity during bounce

When a golf ball is in flight in the air, the basic factors influencing the decay of the velocity of the golf ball are the effects of gravity and drag. Since a ball in flight in the air does not contact a solid object in the form of a collision, it will be appreciated that the decay rate of the velocity due to the gravity and drag factors should be somewhat lower than would be the case when the flight brings the golf ball in periodic contact with a substantially solid mass and the ball is losing energy during each contact or collision as is the case when the golf ball is bouncing on the ground. Accordingly, in order to enhance the realism of the effects produced by the computer, it is desirable to increase the rate of decay of the instantaneous velocity when the bounce portion of a flight cycle is initiated.

Referring to FIG. 4A, a resistor **504** in the drag circuit is tapped on either end thereof and fed to a circuit consisting of a pair of contacts **506***a* which are operated by a relay **506**, a pair of resistors **508** and **510** and a photocell **512** connected in parallel with the resistor **510**. The relay **506** is energized to close contacts **506***a* when the bounce portion of the flight cycle is initiated by the closing of contacts **497***a* operated by the relay **497** described above.

A light bulb **514** is connected in parallel with the emitter-collector circuit of the output transistor of a Darlington connected emitter follower **516** and is arranged to illuminate the photocell **512** to decrease the resistance of the latter in a manner dependent upon the brightness of the light bulb.

A second digital to analog conversion matrix, generally designated **518** (FIG. 2), is connected across the base of the first stage of the emitter follower **516** (FIG. 4A) and the collector thereof. The operation of the matrix **518** is generally similar to that of the matrix **154** and accordingly it is not believed necessary to describe it in detail. As will be apparent from an examination of FIG. 2, the higher the initial velocity V_0 of the ball, the higher the resistance that will be interposed between the base and the collector of the first stage of the emitter follower **516** by the matrix **518** such that the second stage of the emitter follower will be substantially turned off.

As a result, the emitter follower **516** will divert very little current from the light bulb **514** so that the latter will burn very brightly and the photocell **512** will have

very little resistance and the resistance of the circuit including the resistor **510** will be substantially decreased during bounce if the initial velocity of the ball was rather high and this will cause an increase in the rate of decay of the instantaneous velocity V_i, provided of course that the contacts **506***a* are closed.

On the other hand, if the initial velocity V_0 is rather low, the emitter follower **516** will be conducting at a relatively high rate so that the bulb **514** will burn very dimly and the resistance of the photocell will be rather high. In such a case, the resistance of the circuit formed by the elements **508** and **510** will be significantly higher than that set forth in the preceding example so that the change of the rate of decay of the instantaneous velocity during bounce will be relatively small when compared thereto.

It will be noted that whenever the contacts **506***a* are closed in response to the initiation of the bounce portion of the flight cycle, the resistance of the circuit comprised of elements **504**, **508**, **510** and **512** will be lower than would be the case during the prebounce portion of the flight of the ball so that for any bounce, regardless of the initial velocity of the shot, the rate of decay of the instantaneous velocity V_i will be greater during bounce than during the prebounce portion of the flight cycle.

Summarizing, during the bounce portion of a flight, the rate of decay of the instantaneous velocity is increased in direct proportion to the initial velocity of the ball; and in any event, the rate of decay of the instantaneous velocity will be greater during the bounce portion of the flight than during the prebounce portion of the flight. As will be apparent from the circuit values, the change in the rate of decay of the instantaneous velocity during the bounce portion of the flight will be generally asymptotic with regard to instantaneous velocity.

TERMINATION OF THE FLIGHT CYCLE

As mentioned above in the description of the bounce circuitry, the flight cycle including the bounce portion thereof is terminated when the relay **500** is energized by the firing of the unijunction transistor **499**. Specifically, the energization of the relay **500** closes normally open contacts **500***a* to in turn energize a relay **520**. As seen in the left-hand side of FIG. 9, the relay **520** closes normally open contacts **520***a* which applies twenty-four volt power to a timing circuit including a capacitor **522** and a unijunction transistor **524**. Preferably, the time constant of the circuit is in the range of five to eight seconds so that a golfer may observe the various manifestations of the voltage outputs of the computer for a short time after the flight of the ball has been terminated.

At the end of the time period dictated by the time constant of the above circuit, the unijunction transistor **524** is fired which, in turn, will cause a silicon controlled rectifier **526** to be turned on. When the silicon controlled rectifier **526** is turned on, a relay **528** is energized to open normally closed contacts **528***a* thereof to break the circuit from the power source to the relays **496**, **497**, **500** and **520**.

Additionally, the energization of the relay **528** results in the opening of normally closed contacts **528***b* thereof to break the anode-cathode circuit of the silicon controlled rectifier **172** (FIG. 2). Since power is applied to the elevation, azimuth and spin circuits including the various silicon controlled switches thereof from the silicon controlled rectifier **172**, it will be appreciated that the turning off of the latter will also turn off any of the silicon controlled switches in the elevation, azimuth and spin circuits that have been turned on during data acquisition.

It will be recognized that when the relay **529** opens the normally closed contacts **528***a* thereof to ultimately deenergize the relay **520**, power will no longer be applied to the relay **528**. Therefore, in order to maintain the relay **528** energized for a sufficient period of time so as to insure the turning off of such silicon controlled switches or silicon controlled rectifiers as had been turned on previously in the cycle, a capacitor **530** is arranged to discharge across the relay **528** after the contacts **520***a* have opened so as to maintain the relay **528** energized for a short period of time which may be on the order of fifty milliseconds.

After the short time period has elapsed and the charge on the capacitor **530** has been dissipated through the relay **528**, the latter will be deenergized to thereby cause the contacts **528***a* and **528***b* thereof to be closed in readiness for subsequent computer cycles.

RESETTING THE COMPUTER AFTER A CYCLE HAS TERMINATED

From the foregoing description of the computer, it will be apparent that a number of circuits require resetting to be readied for a subsequent computer cycle. Specifically, the amplifier circuits **216**, **248**, **258**, **300**, **483** and **485** which perform integrating functions each include a capacitor which must be discharged before the circuit may again be used for integrating a voltage level on its input.

The switches **214**, **246**, **256**, **298**, **482** and **484** are utilized to perform this function. As mentioned previously, each of the above noted switches include a normally closed or *b* contact and a normally open or *a* contact. Recalling the foregoing description, the respective inputs to the various amplifier circuits performing integrating functions are provided through the normally open or *a* contacts associated with the corresponding amplifier circuit.

Each of the normally closed or *b* contacts is arranged in series with a corresponding resistor which is connected in parallel with the capacitor used in the corresponding circuit. Thus, it will be apparent that whenever one of the switches is closed through its normally closed or *b* contact, the associated capacitor will be discharged through the resulting circuit.

In actuality, each of the switches **214**, **246**, **256**, **298**, **482** and **484** are ganged so as to be operated simultaneously. In other words, all of the switches either are closed through their normally open or *a* contacts to provide inputs from the computer circuitry to their associated amplifier circuits or are closed through their normally closed or *b* contacts to discharge the associated capacitors to reset their associated amplifier circuits.

As seen in FIG. 4A, a relay coil **560** is adapted to be energized when the normally open contacts **562***a* of a relay **562** are closed. The relay coil **560** operates the switches **214**, **246**, **256**, **298**, **482** and **484** and when energized will close the switches through the normally open or *a* contacts.

The relay **562** is connected in the collector-emitter circuit of a transistor **564** which is caused to conduct when a set of normally open contacts **566***a* in its emitter base circuit are closed by a relay **566**.

The relay **566** is illustrated in FIG. 5A. It will be recalled from the foregoing description of the azimuth trigonometry circuit, that whenever a golf ball is detected by the azimuth photocell array **124**, a relay **292** is energized to close a corresponding set of normally open contacts **292***a*. From FIG. 5A, it will be evident that the closing of contacts **292***a* will cause the energization of the relay **566** which, by means of the circuitry including the contacts **566***a*, the transistor **564**, the relay **562** and its associated contacts **562***a* and the relay **560** illustrated in FIG. 4A, will cause the switches **214**, **246**, **256**, **298**, **482** and **484** to be closed through their normally open or *a* contacts. It will be recognized that this action will occur almost simultaneously with the initiation of a flight of a ball from the tee **102**. Thus, in this manner, the computer is conditioned to perform its function.

Referring again to FIG. 5A, it will be apparent that the relay **566** will be deenergized whenever it is no longer provided with 15 volt power from the silicon controlled rectifier **172** (FIG. 2) which is turned off when the contacts **528***b* (FIG. 9) are opened by the energization of

the relay **528** which, it will be recalled, takes place a few seconds after the entire flight of the ball has terminated. Thus, a few seconds after the flight of the ball has terminated, the relay **560** will ultimately be deenergized so that the switches **214, 246, 256, 298, 482** and **484** will be closed through their normally closed or *b* contacts to discharge their associated capacitors and reset the computer for a subsequent cycle.

MISCELLANEOUS FEATURES

Disabling the spin detector for low velocity balls

It has been determined that golf balls having a relatively low total initial velocity reflect very little of the spin placed thereon when struck by a club in terms of actual displacement from the initial direct line of the shot due to hook or slice spin. This factor, together with certain physical characteristics of the arrangement between the tee point **104**, the shell **108** and the location of the spin detector **110** as illustrated in FIG. 1 render the determination of spin on a relatively low velocity ball somewhat inaccurate. Tests have shown that a reliable spin determination cannot be made when the initial velocity of the golf ball is less than approximately one hundred feet per second.

Since a manifestation to a golfer of unreliable data would detract from the realism of the game and because the effect of spin on low velocity shots is relatively insignificant, means are provided for precluding operation of the spin detecting system in such circumstances. Referring to FIG. 2, an AND gate **580** includes a first input connected to the sixth bit of the binary counter **152** and a second input connected to the eighth bit of the binary counter **152**. The arrangement is such that when both the sixth and the eighth bits of the binary counter **152** are in a so-called "set" condition, the AND gate **580** will cause a relay **582** to be energized. The relay **582**, which can only be energized when the silicon controlled rectifier **172** is turned on, includes a pair of holding contacts **582***a* which will maintain the relay **582** energized once the AND gate **580** has energized it until such time as the silicon controlled rectifier **172** is turned off.

Turning now to FIG. 4B, it will be recalled that a voltage level will exist at the point **481** which is representative of the force due to spin. A set of normally open contacts **582***b* operated by the relay **582** are connected between the point **481** and ground. Thus, whenever the relay **582** is energized, the potential at the point **481** will be ground potential which is representative of the condition wherein there is no force on the ball due to spin; and when the voltage quantity is integrated by the amplifier circuit **483**, the velocity due to spin will also be zero. Thus, the only velocity in the X direction at the summing point **358** will be that due to the initial direction of the shot.

While the AND gate **580** has been shown as connected to the sixth and eighth bits of the binary counter **152**, it will be appreciated that it could be connected to but a single bit or a number of bits none of which need necessarily be the sixth and eighth bits of the counter depending upon the period of the clock **150**. This is due to the fact that the count on the binary counter **152** does not represent a velocity, but rather, an elapsed time. Of course, the elapsed time representative by the count on the binary counter **152** depends upon the period of the clock **150**. In the exemplary embodiment described, the period of the clock **150** is such that a count of one hundred and sixty in the binary counter **152** (the count present when both the sixth and eighth bits are in a so-called "set" condition) corresponds to an elapsed time that is substantially equal to the time it would take for a golf ball traveling from the tee point **104** to the elevation photocell array **112** if the ball were traveling at a velocity of one hundred feet per second.

The just described arrangement takes into account the fact that the velocity of the ball may be less than the one hundred feet per second value and yet the sixth and eighth bits of the binary counter **152** may not necessarily be set. For example: for an extremely low velocity, the counter **152** will continue to count upwardly from the one hundred and sixty figure to some other figure wherein the sixth and eighth bits of the counter **152** are not in a set condition. However, it will be apparent before the counter can proceed upwardly of the one hundred and sixty figure, it must pass through that figure and when such occurs, the AND gate **580** will energize the relay **582** which will thereafter be maintained energized by the action of the holding contacts **582***a* even though the sixth and eighth bits of the counter **152** are subsequently put into a so-called reset condition thereby precluding the AND gate **580** from energizing the relay **582**.

Triggering the computer for a ball hit with less than one degree of elevation

From the previous description of the elevation photocell and trigonometry circuit, it will be apparent that when no one of the elevation photocells **114** has been shaded by a ball, elevation angle information cannot be provided to the remainder of the computer. Depending upon the construction of the tee area, it may be possible for a ball to be hit from the point **104** at a 0° or negative angle of elevation, as for example, when a golfer tops a ball. When such a ball is hit, elevation angle information cannot be provided to the remainder of the computer because none of the circuits associated with photocells **114** are energized and furthermore, as will be seen, the fact that the transistor **192** (FIG. 3A) is not turned on by the shading of one of the elevation photocells **114** may lead to automatic resetting of the computer when such should not be the case.

With reference to FIG. 3A, it will be apparent that when the transistor **192** is turned off as would be the case when no one of the elevation photocells **114** has been shaded by a ball, the potential at the collector of the transistor **192** will be approximately equal to the voltage of the power source. A tap from the collector of the transistor **192** is applied to the base of a transistor **600** and this connection will maintain the latter in an on condition until such time as one of the silicon controlled switches **188** has been fired by its associated elevation photocell **114**. The collector of the transistor **600** is tied to the base of a second transistor **602** which also has a lead connected to the common junction of the diodes **294** and the contacts **292***a* operated by the relay **292** as seen in FIG. 5A to receive the LOW BALL ELEVATION TRIGGER signal therefrom.

As a result of this construction, it will be appreciated that the potential applied to the base of the second transistor **602** will be substantially equal to the potential of the power source until such time as the contacts **292***a* close. Accordingly, the transistor **602** will also be turned on until such time as the contacts **292***a* are closed.

The collector of the second transistor **602** is tied to the gate of a silicon controlled rectifier **604** which is connected in parallel with the silicon controlled switch **188** associated with 1° of elevation photocell **114**. Thus, whenever the silicon controlled rectifier **604** is turned on, the elevation trigonometry circuit for 1° of elevation will be energized.

The operation of the circuit is as follows. Proceeding on the assumption that none of the elevation photocells **114** have been shaded by a ball, both the transistor **600** and **602** will be turned on. Because the transistor **602** is conducting, the voltage applied to the gate of the silicon controlled rectifier **604** will be substantially equal to ground potential and the latter will be maintained in an off condition. However, when one of the azimuth photocells **128** is shaded, the resultant energization of the relay **292** in the manner described previously will cause the contacts **292***a* to be closed and the potential at the base of the

transistor **602** will become equal to ground potential thereby turning the transistor **602** off. As a result of this action, the voltage applied to the gate of the silicon controlled rectifier **604** will rise to that of the power source thereby turning the silicon controlled rectifier **604** on to energize the elevation trigonometry circuit for 1° of elevation. It is to be noted that when the silicon controlled rectifier **604** energizes the coil **189** of the 1° elevation circuit, the transistor **192** will be turned on in the manner described previously thereby actuating the lockout system for the elevation photocells **114** in the manner previously described such that the subsequent passing of the head of a golf club through the elevation photocell array **112** will not provide erroneous information to the computer. Furthermore, the turning on of the transistor **192** will energize the reed switch **194** in the manner described previously to close the contacts **194***a* thereof and stop the clock **150**.

It will be appreciated that in the event that one of the elevation photocells **114** is shaded by a ball, some means must be provided to preclude the firing of the silicon controlled rectifier **604** so that the normally obtained data will be used as opposed to the arbitrarily assigned data relative to 1° of elevation provided in the event of an extremely low ball. Since the elevation photocell array **112** is closer to the tee **102** than the azimuth photocell array **124**, it will be appreciated that in the event of a normally struck ball, an elevation photocell **114** will be shaded before an azimuth photocell **128**. This action will result in the transistor **192** being turned on in the normal manner and thus the potential at the base of the transistor **600** will drop to ground potential to turn off the transistor **600** before the relay **292** is energized to close the contacts **292***a* which, it will be recalled, turn off the transistor **602**. When the transistor **600** is turned off, the connection from its collector circuit to the base of the transistor **602** is arranged so that the latter will be maintained on even after the relay **292** is energized. Accordingly, the transistor **602** cannot be turned off when the transistor **600** has been turned off by a normal elevation trigger, and as a result, the silicon controlled rectifier **604** cannot be fired to arbitrarily energize the 1° of elevation circuit. As a result, the data acquired in the normal manner described previously will be provided as an input to the computer.

Automatic reset in the case of a false trigger

Occasionally, a golfer may produce both audio and video trigger signals without actually striking a golf ball. For example, if a golfer takes a practice swing very close to the tee area, he may strike the platform of the tee producing the audio trigger and the vibration set up by the impact of the club against the platform may cause the ball to fall off of the tee or otherwise move from the point **104** thereby providing a video trigger signal. In such a case, the binary counter **152** would begin to count and since the ball would not pass through the elevation photocell array **112**, the clock **150** would not stop, but rather, the counting would proceed continuously until such time as the computer is reset manually.

In order to preclude the need for manual resetting upon such an occurrence, means are provided for automatically resetting the computer in the event the computer receives a valid trigger but the ball does not shade an elevation photocell **114** or an azimuth photocell **128** within a predetermined time period.

Referring to FIG. 10, a pair of normally open contacts **194***b* and **292***b* operated by the relays **194** and **292**, respectively, are connected in series across a capacitor **620**. When the silicon controlled rectifier **172** (FIG. 2) is turned on in response to the occurrence of both a video and an audio trigger, power is applied to the capacitor **620** through a resistor circuit **622** such that the capacitor **620** will begin to charge. The junction between the resistive circuit **622** and the capacitor **620** is connected to a unijunction transistor **624** which will be turned on when the charge on the capacitor **620** reaches a predetermined amount. The values of the capacitor **620** and the resistive circuit **622** are so chosen such that the predetermined charge on the capacitor **620** will not be reached until a predetermined time period that is sufficient to enable the ball hit from the point **104** (FIG. 1) to pass through the azimuth photocell array **124** has elapsed.

It will be recalled from the previous description of the azimuth and elevation photocell and trigonometry circuits that whenever a ball has passed through the azimuth photocell array **124**, the relays **194** and **292** will be energized. As a result, when such is the case, both the contacts **192***b* and **292***b* will be closed to essentially shunt the capacitor **620** and prevent any further buildup of charge thereon. Since such action will take place substantially simultaneously with the passing of the ball through the azimuth photocell array **124**, it will be appreciated that the charge on the capacitor **620** in such a case will never reach the predetermined level sufficient to fire the unijunction transistor **624**.

On the other hand, if there is a valid audio and video trigger but the ball fails to pass through the azimuth photocell array **124** as would be the case in the example set forth above, the failure of the azimuth and elevation photocell and trigonometry circuits to energize the relays **194** and **292** would preclude the shunting of the capacitor **620** so that the charge thereon would build up to the predetermined value sufficient to fire the unijunction transistor **624**.

The unijunction transistor **624** is connected between ground and the cathode of the silicon controlled rectifier **172** and in series with the resistor **626**. The resistor **626** is located on the ground side of the unijunction transistor **624** and the common junction of the unijunction transistor **624** and the resistor **626** is connected to the base of a transistor **628**. Thus, when the unijunction transistor **624** is fired, the transistor **628** will be turned on.

The emitter-collector circuit of the transistor **628** is connected between the gate of the silicon controlled rectifier **172** (FIG. 2) and ground so that when the transistor **628** is caused to conduct, ground potential will be applied to the gate of the silicon controlled rectifier **172**. This will cause the silicon controlled rectifier **172** to be turned off thereby deenergizing the various portions of the computer that rely upon the conductance of the silicon controlled rectifier **172** for power to cause the computer to be reset as described previously.

Resetting the clock and the binary counter

As mentioned previously, both the clock **150** and the binary counter **152** are formed in any suitable, conventional manner. The exemplary embodiment of the invention contemplates that the clock **150** is of the conventional type wherein the application of ground potential to a terminal thereof will disable the clock. Similarly, in the exemplary embodiment of the invention, the flip-flops comprising the binary counter **152** are of the type that will be reset when a particular junction in each flip-flop is brought to ground potential.

In order to bring such junctions in the clock **150** and the binary counter **152** to ground potential, a transistor **630** has its emitter connected to ground and its collector connected to such junction. Thus, whenever the transistor **620** is turned on, both the clock **150** and the binary counter **152** will be reset. In order to turn on the transistor **630**, a second transistor **632** is provided. The collector of the transistor **632** is connected to a source of power while the emitter thereof is connected to ground. The base of the transistor **630** is connected to the collector of the transistor **632**. Thus, whenever the transistor **632** is turned off, the transistor **630** will be turned on to reset the clock **150** and the binary counter **152**; but when the transistor **632** is turned on, the transistor **630** will be turned off.

From the foregoing description, it will be apparent that it is necessary to turn on the transistor **632** whenever a computer cycle is taking place. Accordingly, the cathode of the silicon controlled rectifier **172** (FIG. 2) is connected to the base of the transistor **632** (FIG. 10). As a result, whenever both an audio and video trigger are present, the turning on of the silicon controlled rectifier **172** will result in the application of power to the base of the transistor **632** to turn the latter on. On the other hand, whenever the silicon controlled rectifier **172** is turned off the purposes of resetting the computer, the transistor **632** will be turned off thereby turning the transistor **630** on to reset the clock **150** and the binary counter **152.**

Indicating to a golfer when the computer has not been reset

It will be recalled from the description of FIG. 1 that a light **138** is to be energized whenever the computer is in a cycle and has not been reset while a light **120** provides an indication that the computer is in readiness to accept information preparatory to undergoing a subsequent flight cycle. As illustrated in FIG. 4A, the lights **120** and **138** are comprised of bulbs having a common connection to one side of a source of power. The light **120** has its other side returned to power through the normally closed contact **640***a* of a switch **640** operated by a relay coil **642** while the light **138** is returned to power through a conventional flasher unit **644** and the normally open contact **640***b* of the switch **640.**

From the above discussion of the resetting of the computer it will be recalled that the relay **560** is energized whenever the computer is in a cycle. The relay coil **642** is connected in parallel with the relay **560** and accordingly will also be energized whenever the computer is in a computer cycle. Thus, whenever the computer is cycling, power will be applied to the light **138** through the flasher unit **644** and the normally open contact **640***b* operated by the coil **642** to indicate to the golfer that the computer is in a flight cycle and that a ball should not be hit from the tee. On the other hand, when the computer cycle has terminated and the computer is reset as evidenced by the deenergization of the relay **560** and the coil **642**, the light **120** will be energized through the circuit including the switch **640** and the normally closed contact **640***a* thereof. Thus, whenever the computer is reset, the light **120** will be energized to indicate to the golfer that he may stroke a shot from the tee; and for purposes of the video trigger system described previously, while when the computer is in a cycle, the light **138** will be energized and will flash periodically to indicate to the golfer that a ball should not be hit.

It will be appreciated that if a golfer were to disregard the signal produced by the flashing of the light **138** in the midst of the computer cycle, no data would be lost because the deenergization of the light **120** at this time would preclude operation of the triggering system and the lockout systems associated with the elevation photocell array **112**, the azimuth photocell array **124**, and the spin detector **110** would preclude the entry into the computer of any data relative to the prematurely hit ball. Thus, a prematurely hit ball will be completely disregarded by the computer.

Warning of interference with the data acquisition systems

Means are also provided to warn a golfer or a bystander that he is obstructing the data acquisition systems. Referring to FIG. 1, a light source **650** is interposed between the elevation photocells **114** and the tee point **104.** A photocell **652** (not illustrated in FIG. 1) is arranged on the opposite wall of the room housing the tee **102** to receive light from the light source **650.** Thus, a golfer or bystander standing sufficiently forwardly of the tee point **104** to block the beams of light directed to the elevation photocells **114** will necessarily interrupt the beam of light passing from the light source **650** to the photocell **652.**

Turning now to FIG. 4A, the means by which interruption of the beam of light from the source **650** to the photocell **652** is utilized to indicate to a golfer that he is interfering with the data acquisition system are illustrated schematically. The photocell **652** is connected to any suitable conventional amplifier **654** which is adapted to drive a relay **656** whenever the photocell **652** is shaded as by a golfer or by a bystander interposing his body between the light source **650** and the photocell **652.**

The relay **656** includes a set of normally open contacts **650***a* which are in series with a conventional buzzer **658** across a source of power. Thus, whenever the photocell **652** is shaded, the relay **656** will be energized to close the contacts **656***a* thereby energizing the buzzer **658** to provide an audible signal to the golfer to indicate that he is interfering with the data acquisition system. Preferably, the relay **656** is of the conventional type incorporating a short time delay after energization before the contacts **656***a* are closed so as to prevent a club head during the golfer's follow through from triggering the buzzer **658.**

BALL SPOT PROJECTOR

One form of a ball spot projector that is ideally suited for use in the just described computer is illustrated in FIGS. 11–15, inclusive. Referring to FIG. 11, the ball spot projector is seen to comprise an elongated vertically arranged tube **700.** One end of the tube **700** is supported by a circular collar **702** surrounding the tube **700** and which is mounted on a shaft **704** secured to a stationary frame **706.** The other end of the tube **700** is received in apertures in a pair of plates **708** and **710** which are also suitably secured to the frame **706.**

At the end of the tube **700** adjacent the plates **708** and **710**, a light source and condensing lens system, generally designated **712**, are disposed within the tube. At the opposite end of the tube **700** and disposed therewithin is a suitable optical system generally designated **714.**

Just below the lower end of the tube **700** is disposed a mirror **716** which is mounted for universal movement about two mutually perpendicular axes by means, generally designated **718**, on an extension **720** that is cantilevered from the lower end of the frame **706.** Preferably, the reflective surface of the mirror is arranged to receive a light beam from the source **712** at the point of intersection of the axes.

Also mounted on the extension **720** are first moving means, generally designated **722**, for moving the mirror **716** about one axis and second moving means generally designated **724** for moving the mirror **716** about a second axis that is perpendicular to the first axis. A feedback potentiometer **726** is associated with the first moving means **722** while a feedback potentiometer **728** is associated with the second moving means **724.**

Near the upper end of the tube **700** and interposed between the light source **712** and the optical system **714** is an iris system and associated moving mechanism, generally designated **730**, which causes the beam of light from the light source **712** to the mirror **716** to be in the form of a spot and additionally controls the size of the spot as will be described in greater detail hereinafter.

The controlled spot of light from the light source **712** is directed to the mirror **716** and reflected thereby to the screen **106** (FIG. 1). Because the mirror **716** is universally mounted, it will be appreciated that the spot may be disposed at any point on the screen **106.** As will be described in greater detail, the first moving means **722** are operative to shift the spot in a horizontal plane or in the X direction while the second moving means

724 are operative to shift the spot in a vertical plane or in the Y direction. The iris mechanism 730 controls the size of the spot projected on the screen 106 so as to provide the illusion of distance, the Z directional effect.

Referring now to FIGS. 12 and 13, the first moving means 722 will be described. A conventional AC servo motor 740 is mounted on a collar 742 that depends from the extension 720 of the frame 706. The servo motor 740 includes an output shaft 744 which is surrounded by a sleeve 746 to which a coupling 748 is secured. A clutch arrangement is provided by the sleeve 746 and coupling 748 for safety purposes. The coupling 748 is also secured to the wiper shaft 750 of the feedback potentiometer 726. Thus, the position of the wiper of the potentiometer 726 will be controlled in accordance with the position of the output shaft 744 of the servo motor 740.

The sleeve 746 and the coupling 748 also serve to mount a cam 752. A cam follower 754 mounted on an arm 756 is in contact with the periphery of the cam 752.

The arm 756 is keyed to a shaft 758 journalled in bearing 760 within a bore 762 in the extension 720. The end of the shaft 758 opposite the arm 756 is secured to the bight 764 of a U-shaped member having arms 766 and 768. The ends of the arms 766 and 768 are provided with identical apertures 770 (only one of which is shown) which receive bearings 772 that journal stub shafts 774. The stub shafts 774 in turn support mounting plates 776 on which the mirror 716 is mounted.

A spring 777 is interposed between a bracket 778 secured to the bight of the U-shaped member and a stationary post 779 mounted on the frame 706 to bias the cam follower 754 into constant contact with the cam 752.

From the foregoing description, it will be apparent that when the servo motor 740 is energized, the driving of the cam follower 754 by the cam 752 will cause the mirror 716 to rotate about the longitudinal axis of the shaft 758. As noted previously, the disposition of the projector is such that such movement of the mirror 716 will cause horizontal movement of the ball spot on the screen 106.

The second moving means 724 will now be described. As best seen in FIG. 12, the second moving means 724 includes a servo motor 780 that is secured to the frame 706. Referring now to FIG. 13, the servo motor 780 includes an output shaft 782 to which a cam 784 is keyed. A safety clutch arrangement (not shown) similar to that described in conjunction with the first moving means is provided in the drive system of the second moving means 724.

Returning to FIG. 12, the output shaft of the servo motor 780 is coupled coaxially to the wiper shaft 786 of the feedback potentiometer 728. Accordingly, it will be apparent that the position of the wiper of the potentiometer 728 will be dependent upon the position of the output shaft 782 of the servo motor 780.

As best seen in FIG. 13, a cam follower 788 mounted on the lower end of a push rod 790 is in contact with the periphery of the cam 784. The push rod 790 includes grooves 792 in both sides thereof and as seen in FIG. 12, rollers 794 pivotally mounted on a block 796 secured to the frame 706 are disposed within the grooves 792 to guide the push rod for reciprocal movement in a vertical plane.

At the upper end of the push rod 790, there is disposed an elongated knife edge 798. The knife edge 798 is arranged to be in contact with a post 800 that is circular in cross section extending between rearward projections of the mounting plates 776 on either side of the mirror 716. In order to insure contact between the post 800 and the knife edge 798, a spring 802 is interposed between a mounting bracket 804 secured to mounting plates 776 at one end thereof and to the bracket 778 secured to the bight 764 of the U-shaped member to bias the post 800 against the knife edge. Where the projector 656 is generally vertically arranged as in the exemplary embodiment, the spring 802 may be omitted as gravity will act in place thereof.

As a result of the above construction, it will be apparent that rotation of the output shaft 782 of the servo motor 780 will cause reciprocation of the push rod 790 which in turn will cause the mirror 716 to pivot about the axis provided by the stub shafts 774 to thereby provide vertical movement of the ball spot upon the screen.

The utilization of the knife edge 798 for transmitting motion to the mirror 716 that would cause rotation about the axis defined by the stub shafts 774 insures that movement of the mirror about the pivot axis provided by the shaft 758 will always cause the projected spot to move in a straight line. In this respect, it will be observed that if a push rod that only made point contact with the post 800 were to be used in place of the knife edge 798, for any position of such a push rod other than where the point of contact lies in a plane encompassing the pivotal axis provided by the stub shaft 774 and normal to the rotational axis of the shaft 758, rotation of the mirror about the axis provided by the shaft 758 would cause the projected spot to describe an arc on the screen. This would cause the position of the spot on the screen to vary in the Y direction as a function of the variation in the X direction thereby introducing an inaccuracy in the spot position and the simulation viewed by a golfer. If desired, a second knife edge could be used in place of the post 800.

Turning now to FIGS. 14 and 15, the iris mechanism and moving means 730 will be described. A servo motor 810 is mounted on the plate 708 by means of a second plate 812 suitably secured to the plate 708. The output shaft 814 supports an extension 816 on which an overrunning clutch 818 and a gear 820 are mounted. The arrangement is such that the gear 820 will be driven by the shaft 814 except when a load in excess of a predetermined amount is placed upon the gear 820 at which time the overrunning clutch 818 will begin to slip and fail to transmit rotational motion to the gear 820.

Journalled in a suitable bearing 822 supported between the plate 708 and 710 is a shaft 824 which has one end connected to the wiper shaft 826 of a feedback potentiometer 828. The other end of the shaft 824 mounts a relatively large gear 830 having a cam track 832 machined in the upper side thereof.

An arm 834 is keyed to a shaft 836 journalled in a second bearing 838 which is supported by the plates 708 and 710. As best seen in FIG. 15, the left-most end of the arm 834 mounts a follower 840 which is disposed within the cam track 832 of the gear 830. At the right-most end of the arm 834 there is disposed a sector gear 842 which is in mesh with a gear 844 that is mounted on a hollow sleeve 846. The sleeve 846 is in turn secured to a conventional iris or shutter mechanism 848 that is mounted within the tube 700 by suitable mounting means anchored to the plate 708.

As a result of the just described construction, when the servo motor 810 is energized, the output gear 820 associated therewith will drive the gear 830. This in turn will cause movement of the arm 834 about the longitudinal axis of the shaft 836 in that the follower 840 is disposed within the cam track 832 of the gear 830. Rotation of the arm 834 about the longitudinal axis of the shaft 836 will in turn cause arcuate movement of the sector gear 842 to rotate the gear 844 thereby rotating the sleeve 846 to operate the iris mechanism and cause the latter to increase or decrease the size of its light passing opening to regulate the size of the spot ultimately projected upon the screen. The potentiometer 828 due to its association with the iris mechanism 848 by means of the shaft 824, the gear 830, the arm 834, and the gear 844 will have its wiper positioned in accordance with the degree of opening of the iris mechanism 848.

Suitable stop means generally designated **850** are provided to limit the movement of the gear **844** and the sleeve **846** to preclude damage to the iris mechanism **848**. When further movement of the gear **844** is limited by the stop means **850**, the clutch **818** will begin to slip thereby precluding damage to the gear mechanism.

The manner in which the ball spot projector is controlled by the computer will be described hereinafter.

MAP SPOT PROJECTOR

The purpose of the map spot projector is to provide a golfer with a perceptible indication on a map of the hole on a golf course which the golfer is playing of the point of termination of the shot simply for information purposes and, if the invention is used in conjunction with other equipment, information relative to the selection of the next scene, information as to the lie of the next shot (i.e. sand, rough or fairway) and whether the golfer should proceed to a green to putt out.

A typical map for use with the map spot projector is shown in FIG. 16. The map may be printed on any suitable relatively rigid sheet **860** and depicts the layout of a hole on a golf course. A line **862** designates a fairway and the area therewithin may be colored a medium green. A second line **864** defines a rough surrounding the fairway defined by the line **862** and the area between the lines **862** and **864** may be colored a darker green to indicate the rough. Various continuous lines **866** may be used to designate sand traps and the area therewithin may be colored a sand color to designate a sand trap. A continuous line **868** designates a green and may be colored a lighter green to distinguish it from the fairway and the rough while lines **870** and **872** may define a water hazard and the area between the two lines may be colored blue. A dotted line **874** in the vicinity of the green may be used to indicate that a golfer is in sufficiently close proximity to the green so that the shot need not be played with the use of the computer as will be discussed in greater detail hereinafter.

Various undesignated lines divide the fairway, the rough and the sand into a plurality of discrete zones and each zone may bear characteristic indicia **875** representative of a scene to be selected for display on the screen **106** by a projector when a golfer is about to make a shot from that particular zone. Each zone also includes a circle **876** that indicates the point in the zone from which the scene was taken and is also used for computational purposes as will appear hereinafter.

The green is also divided into a plurality of zones indicated by the concentric circles labeled A, B, C, D and E. The hole is located in the center of the circle designated A. Corresponding indicia may be marked on a separate green area on which the golfer may actually putt so that by means of the map and the map spot projector, the golfer will be appraised of the distance from the cup on the actual green area that he must place his ball before putting out.

Small zones within the area between the line **868** and the dotted line **874** may bear suitable indicia **877** for indicating to the golfer where a ball must be placed adjacent the separate green area for chipping or pitching onto the green without the use of the computer.

Turning now to FIGS. 17 and 18, the equipment associated with the map spot projector and the manner in which it is used will be described. As mentioned previously in conjunction with the description of FIG. 1, a table **134** is provided and includes an elongated, dovetailed slot **880** in which an elongated member **882** is disposed for longitudinal movement. The upper surface of the member **882** is in the plane of the table **134**.

Suitable releasable pivotal mounting means **884** are located concentrically with the golf hole on the map printed on the sheet **860**. In other words, the mounting means **884** are located in the center of the A circle in the area defined by the line **868**. Suitable means (not shown) are placed on the member **882** for cooperating with the mounting means **884** to thereby pivotally mount the sheet **860** on the member **886** for rotative movement about a vertical axis that is concentric with the hole on the map and permit removal of the sheet **860** from the table **134**. Thus, the sheet **860** is removably mounted for longitudinal movement relative to the slot **880** and for rotative movement about the just mentioned axis.

Mechanically speaking, the map spot projector **132** may be substantially identical with the ball spot projector described previously with the exception that there is no need to provide the iris and moving mechanism **730** in that distance in the Z direction is indicated by movement of the spot opposed to a change in spot size. Electrically, the map spot projector **132** differs substantially from the ball spot projector. It will be recalled that in the ball spot projector, the first moving means **722** provides for movement of the ball spot in the X direction while the second moving means **724** provides for movement of the ball spot in the Y direction. In the map spot projector, the first moving means **722** is again used for providing movement in the X direction but the second moving means **724** is used to provide movement in the Z direction and there is no provision for spot control in the Y direction.

The map spot projector **132** is mounted above the table **134** and is oriented to direct its spot downwardly toward the table **134**. It is also oriented so that movement of the spot solely in the Z direction under the influence of the second moving means **724** will cause the projected spot to move along a line coincident with the line of movement of the member **882** within the slot **880**. More specifically, the line of movement of the spot projected by the map spot projector **132** intersects the means **884** for any position of the member **882** and, therefore, also intersects the hole on the map.

A reference spot projector **886** is also disposed above the table **134** and projects a single reference spot of light downwardly to a fixed position that is intersected by the line of travel defined by movement of the map spot solely under the influence of the second moving means **724**. Furthermore, the projector **886** is arranged with respect to the ball spot projector **132** so that when the second moving means **724** of the latter has oriented the mirror **716** to direct the spot to a position corresponding to zero distance in the Z direction, the spots projected by the projector **886** and the map spot projector **132** will coincide on the map.

The map spot projecting system is used as follows. Assuming that the golfer is about to tee off on a hole, he will orient the map by moving the sheet **860** so that the spot projected by the projector **886** will be focused on the circle **876** in the tee area of the map. The golfer will then stroke the shot causing the computer to cycle and, by means to be described hereinafter, the computed data relative to the point of termination of the flight of the ball will be provided to the map spot projector **132** and the latter will project its spot of light to a point on the map that reflects the zone in which the golfer's shot terminated. Specifically, Z distance information is provided to the second moving means **724** while X distance information is provided to the first moving means **722** and the two operate in conjunction with each other to displace the spot projected by the ball spot projector **132** to a point representative of the actual point of termination of the shot as computed by the computer. The information presented to the golfer at this point in the game is illustrated by the position of the sheet **860** bearing the map, a spot of light **888** representing the reference spot and a spot of light **890** representing the terminating point of the shot in FIG. 17.

From the above description of the map, it will be apparent that the golfer may look to the zone in which the spot **890** is located to determine whether he is in the rough, the sand or the fairway or should proceed to a separate green area to approach the green without the aid of the computer and what scene, if any, should be selected

for his next shot. As shown in FIG. 17, the golfer would be in the rough and should select a lie corresponding to a lie in the rough. Furthermore, it will be apparent that the area is not sufficiently close to the green so that the golfer may play his next shot without the aid of the computer, and therefore, the golfer before playing his next shot should reorient the map on the sheet **860**.

By moving the sheet **860** longitudinally of the table **134** and pivoting it about the axis provided by the means **884**, the golfer will then reorient the map so that the reference spot projected by the projector **886** will be focused on the circle **876** of the zone in which his previous shot terminated. As seen in FIG. 18, this point is indicated at **892**. The golfer will then hit his second shot and the computer will cycle and ultimately cause the ball spot projector **132** to indicate the zone on the map in which the second shot terminated. As illustrated in FIG. 18, this point is indicated at **894**.

The golfer will proceed to orient and reorient the map in the manner just described until such time as the map spot projector indicates that his ball has landed on the green or in one of the surrounding areas sufficiently close so that he may approach the green without the use of the computer, at which time the golfer may then proceed to such equipment that may be provided for that purpose and hole out. At this point, the golfer would then play the subsequent hole on the course. In order to do such, it is only necessary to separate the sheet **860** from the member **882** and a map of a succeeding hole may then be mounted on the member **882** so that it may be played. In this way, a golfer may play several holes from tee to green.

It will be recognized that there is no electrical connection between the computer and the map on the sheet **860**. In actuality, the only relationship is a physical one that requires the orientation of the map spot projector **132** with regard to the reference spot projector **886** in the manner previously described and that movement of the sheet **860** on which the map is printed relative to the line defined by Z movement of the spot projected by the map spot projector be in the manner described previously. Finally, it is necessary to control the amount of movement of the spot projected by the map spot projector **132** in accordance with the scale of the map on the sheet **860**.

CONTROLLING THE BALL SPOT PROJECTOR

The control system for the ball spot projector is illustrated in FIG. 19. First, with reference to the ball spot projector and the regulating of the size of the projected spot for the purpose of simulating distance, a micropositioner **900** is provided which is connected to the $+S_z$ lead illustrated in FIG. 4B and to the wiper of the potentiometer **828** illustrated in FIG. 14, the ends of the latter being connected between power and ground. The servo motor **810** includes a first winding **902** which, when energized, will cause the output shaft to rotate in one direction and a second winding **904** which when energized will cause the output shaft to rotate in the opposite direction. The common junction of the windings **902** and **904** is connected to one side of a source of alternating current. The opposite side of the winding **902** is connected to a contact **900***a* of the micropositioner **900** while the opposite side of the winding **904** is connected to a contact **900***b* of the micropositioner **900**. The blade **900***c* of the micropositioner **900** is returned to the opposite side of the source of alternating current.

As will be apparent to those skilled in the art, when no current is flowing through the coil of the micropositioner **900**, the blade **900***c* thereof will be in the position shown and a circuit to either of the windings **902** or **904** will not be completed. However, when current flows through the coil of the micropositioner **900** in one direction, the blade **900***c* will make an electrical connection with the contact **900***a* while if the flow of current through the micropositioner is in the opposite direction, the blade **900***c* will make an electrical connection with the contacts **900***b*.

The operation of the device is as follows. Initially, the distance in the Z direction will be equal to zero and as a result, the voltage applied on the $+S_z$ input to the micropositioner **900** will be 0 volt. Assuming that the motor **810** has been previously reset to provide an iris opening corresponding to a Z distance of zero, it will be apparent that the wiper of the potentiometer **828** will be in an extreme left position as viewed in FIG. 19. At this time, there will be no current flow through the micropositioner **900** in that a 0 volt or ground potential will be applied at either end thereof.

When the flight of the ball has been initiated by a golfer and the required data has been assimilated, a voltage quantity that will gradually increase in a manner proportional to the theoretical distance in the Z direction between the ball at a corresponding point in time and the tee will be applied to the coil of the micropositioner **900**; and since the wiper of the potentiometer **828** will be at a point thereon wherein a 0 volt potential is sensed, current will flow through the micropositioner **900** to cause the blade **900***c* to make contact with one of the contacts **900***a* or **900***b*. This, of course, will energize the motor **810**, and it will, in the manner previously described, manipulate the iris of the ball spot projector so as to decrease the size of the projected spot.

Rotation of motor **810** will also cause an adjustment of the position of the wiper of the potentiometer **828** in a rightward direction as viewed in FIG. 19 so as to increase the potential applied at the right-hand side of the micropositioner coil **900**. However, since the integrating process performed by the computer is continuing and the distance in the Z direction will continuously increase until the ball flight is terminated, current will continue to flow and the motor **810** will remain energized to continually decrease the size of the projected spot.

When the theoretical flight of the ball has terminated, it will be appreciated that the voltage level representative of the distance in the Z direction will become constant. At substantially the same time, the continued movement of the motor **810** will cause the wiper of the potentiometer **828** to be placed at such a position so as to sense a voltage that is substantially equal to the now constant voltage representative of the distance in the Z direction. At this time, current will cease to flow through the micropositioner **900** and the motor **810** will stop thereby terminating operation of the iris at a time when the size of the projected spot corresponds to approximately that which would be seen from a tee point by a golfer when observing a ball that had traveled a distance such as that computed by the computer and of which the voltage level representative of S_z is indicative of.

In order to reset the iris mechanism for the next shot, by means to be described in greater detail hereinafter, the voltage at the S_z input to the micropositioner is reduced to ground potential thereby creating a current flow in the micropositioner **900** that will take place in the opposite direction from that just described so that the blade **900***c* will close through the opposite contact from that just described and energize the opposite coil of the motor **810** thereby causing the latter to reverse its direction to increase the size of the spot. Such energization of the motor **810** will cause the wiper of the potentiometer **828** to be moved leftward as viewed in FIG. 19 until such time as it senses a 0 volt or ground potential on the potentiometer **828**. When such occurs, current will cease to flow in the micropositioner **900**; and as a result, the blade **900***c* will revert to the position illustrated in FIG. 19 and the motor **810** will be completely deenergized.

It will be recalled from the previous mechanical description of the ball spot projector that the servo motor **780** is ultilized to provide for displacement of the spot with regard to the vertical or the Y direction. The control system for the motor **780** in the ball spot projector includes a switch **906** having a normally closed contact **906***a* which is connected to the S_y output lead of the computer (FIG.

4B). The switch **906** is connected to a differential amplifier **910** along with an input from the wiper of a potentiometer **912** connected between power and ground. An input whose voltage is proportional to the actual displacement of the projected spot on the screen is applied to the differential amplifier **910** and is taken from the wiper of the potentiometer **728** via the normally closed contact **914***a* of a switch **914**. The potentiometer **728** has its opposite ends connected to the $-S_z$ and $+S_z$ leads of the computer (FIG. 4B).

The output of the differential amplifier **910** is fed to a magnetic modulator **916** and in turn to a conventional alternating current servo amplifier **918**. The output of the servo amplifier **918** is then fed through normally closed contacts **920***a* and **922***a* of switches **920** and **922**, respectively, to the servo motor **780**.

The operation of the motor **780** to control the vertical position of the projected spot in accordance with the value of the voltage quantity S_y at any corresponding point in time will now be described. Initially, the wiper of the potentiometer **728** will be somewhat to the left of center as viewed in FIG. 19 for reasons that will become apparent hereinafter.

Upon the start of a computer cycle and as computed distance in the Y direction increases, the voltage applied on the S_y input to the differential amplifier **910** will swing more negative. Similarly, with the initiation of the shot, the voltage applied to the left-hand side of the potentiometer **728** representative of the distance in the Z direction will increase positively while the voltage of opposite polarity is also representative of the Z distance applied to the right side of the potentiometer **728** will increase negatively. It should be kept in mind that because the voltage quantities representative of $+S_z$ and $-S_z$ are always equal and opposite, a tap to the center point of the potentiometer **728** will always yield a potential of zero volt.

From the foregoing, it will be apparent that as the Y distance increases and the Z distance increases, due to the initial position of the wiper of the potentiometer **728**, a positive voltage will be fed therefrom to the differential amplifier **910** while an increasing negative voltage representative of the distance in the Y direction will be fed to the differential amplifier on the S_y input thereto. The difference between the two inputs provides a signal proportional to the error between the commanded Y location of the spot and the actual Y location of the spot and this in turn is modulated by the magnetic modulator **916** and amplified by the servo amplifier **918** to drive the motor **780** in a manner to cause the projected ball spot to rise on the screen. Because of the polarity of the signals and the interconnection between the motor **780** and the potentiometer **728**, it will be apparent that the wiper of the latter will move rightwardly as viewed in FIG. 19.

At some point in time, the peak of the trajectory of the ball will be reached and from that time until the bouncing of the ball is initiated, the negative voltage provided on the S_y input to the differential amplifier **910** will become more positive and shortly after it has peaked out at its negative most value, it will become positive with respect to the voltage representing actual spot location being sensed by the wiper of the potentiometer **728** and applied to the differential amplifier **910**. As a result, the polarity of the signal from the differential amplifier **910** to the magnetic modulator **916** will be reversed to ultimately reverse the direction of the motor **780** to lower the projected spot on the screen. At this point, the wiper of the potentiometer **728** will reverse its direction and begin to move toward the left in FIG. 19.

At some point, the computer will determine that initiation of the bounce portion of the flight cycle should be initiated and the voltage placed on the S_y lead will then swing negative with respect to that representing actual spot location applied to the differential amplifier **910** thereby causing the motor **780** to again reverse its direction to raise the spot on the screen. At some point in the bounce, the voltage produced on the S_y lead will peak out and begin to swing more positive thus causing the motor **780** to again reverse its direction and lower the spot. This process will continue until the bounce portion of the flight cycle is terminated at which time the voltage applied to the differential amplifier **910** on the S_y lead from the computer will be 0 volt corresponding to a Y distance of zero.

In order to add realism to the game, due to the fact that the scene projected on the screen **106** is a perspective view, the terminal point of the spot on the screen should be varied vertically depending upon the distance the shot traveled. That is to say, for a shot that would have traveled one hundred yards, the movement of the spot projected on the screen should be terminated at a lower point than would be the case if the shot would have traveled two hundred yards. This factor is taken into account in the construction as described above as follows.

The potentiometer **912** is adjusted to provide a constant voltage input to the differential amplifier **910** that corresponds to the distance between the ground and the eye level of the observer and will generally be on the order of about six to sixteen feet. Thus, the differential amplifier **910** will have a positive input unless the voltage applied on the S_y lead is sufficiently negative. It will also be observed that the voltage across the potentiometer **728** is proportional to the distance in the Z direction. Since the position of the spot on the screen is always reflected by the position of the wiper along the potentiometer **728**, and since the further the wiper of the potentiometer **728** is to the left as viewed in FIG. 19, the lower the position of the projected ball spot on the screen, it will be apparent that for a low voltage representative of the distance in the Z direction which would correspond to a relatively short shot, the wiper of the potentiometer **728** will be more to the right than would be the case if the value of S_z were greater corresponding to a longer traveling shot. Accordingly, for a low value of S_z, the spot will be lower on the screen than would be the case for a higher value of S_z. Thus, the varying of the final position of the projected spot on the screen in accordance with the distance the shot would have traveled is accomplished by means of the potentiometer **912** and the application of a voltage proportional to the Z distance to the potentiometer **728**.

The manner in which the motor **740** is operated to position the projected spot on the screen **106** horizontally to illustrate displacement in the X direction will now be described. A differential amplifier **930** is provided with a first input for receiving a voltage quantity representative of the calculated distance in the X direction. A second input to the differential amplifier **930** is taken from the wiper of the potentiometer **726** to provide a signal whose magnitude is proportional to the actual displacement of the projected spot on the screen in the X direction. The latter is connected to the $+S_z$ and $-S_z$ leads illustrated in FIG. 4B in a manner similar to the potentiometer **728** described previously. Additionally, a switch **932** having a normally closed contact **932***a* is interposed in the line between the wiper of the potentiometer **726** and the differential amplifier **930**.

The output of the differential amplifier **930** is provided to a magnetic modulator **934** of conventional construction and the output thereof is amplified by a conventional servo amplifier **936**. The output of the servo amplifier **936** is then fed through the normally closed contacts **938***a* and **940***a* of switches **938** and **940**, respectively, to the motor **740**.

It will be apparent from the foregoing description of the circuit for determining the distance in the X direction that when the ball is to the left of the theoretical straight shot line, the voltage quantity representative of S_x will be positive while if the ball is to the right of the theoretical straight shot line the voltage quantity representative of S_x will be negative. Having this factor in mind, the

operation of the just described circuitry will now be explained.

Initially, the wiper of the potentiometer **726** will be at the center thereof so that on its input to the differential amplifier **930**, a 0 volt potential will be applied.

If the computer determines that the ball is traveling to the left of the theoretical straight shot line at a relatively constant rate (a no spin condition), the voltage quantity representative of the calculated S_x will increase from 0 volt in the positive direction. The difference between the 0 volt potential representing actual spot displacement applied from the potentiometer **726** and the increasing positive potential applied from the computer to the differential amplifier will be sensed by the latter and a signal representative thereof will be applied as an input to the magnetic modulator **930** which converts it to an alternating current signal that is amplified by the servo amplifier **936**. The output of the latter, which is representative of the error between the actual position of the projected spot on the screen as evidenced by the position of the wiper of the potentiometer **726** and and the commanded position of the spot on the screen as evidenced by the magnitude of the positive voltage representative of S_x, will cause the motor **740** to rotate in a direction that will move the projected spot toward the left. This will cause the wiper of the potentiometer **726** to move toward the left as viewed in FIG. 19 at a rate dependent upon the rate of change of the voltage quantity representative of S_x until such time as the flight of the ball has terminated when S_x becomes constant. At this time, the wiper of the potentiometer **726** will have moved sufficiently to the left as viewed in FIG. 19 so as to provide an input to the differential amplifier having a potential substantially equal to the constant value of S_x at this point in time indicating that the commanded location and the actual location of the projected spot coincide. As a result, the output of the differential amplifier will be substantially equal to zero and the motor **740** will cease to rotate.

In the event the ball was detected as traveling to the right of the theoretical straight shot line, the voltage quantity representative of S_x would be negative in value. The motor **740** would have been caused to rotate in the opposite direction from that described in the preceding example. In such a case, the wiper of the potentiometer **726** would have been advanced to the right as viewed in FIG. 19 until balancing occurred in the manner described above.

In the event that the ball was initially hit to the left of the theoretical straight shot line but was sliced and ultimately terminated at a point to the right of the theoretical straight shot line, it will be apparent that from the foregoing description of the azimuth trigonometry **270** together with the spin circuitry **380** that the voltage quantity S_x would have initially increased in the positive direction at a decreasing rate as the force due to spin provided by the hook slice matrix **380** gradually overcame the velocity due to the initial direction of the ball until such time as the ball was traveling substantially parallel to the straight shot line but to the left thereof. At this time, the voltage representative of S_x would peak out in the positive direction and would begin to swing toward a negative value due to the increasing effect of spin until at some point it would cross ground potential and increase on the negative side of ground potential.

In such a situation, the motor **740** would initially be rotating in a direction to move the ball spot to the left and the wiper of the potentiometer **726** to the left as viewed in FIG. 19. However, when he voltage peaked out in the positive direction, the direction of rotation of the motor **740** would be reversed and it would begin to move the projected spot toward the right and the wiper of the potentiometer **726** would begin to be moved toward the right as viewed in FIG. 19. When, in the course of the negative going swing of the voltage quantity representative of S_x, the latter was equal to a 0 volt potential, the wiper of the potentiometer **726** would be at the center point of the potentiometer **726** and as the voltage quantity representative of S_x increased on the negative side of 0 volt, the motor **740** would continue to move the projected spot to the right and the wiper of potentiometer **726** to the right as viewed in FIG. 19.

The action for a ball initially hit to the right but with a hook would be substantially the same as that described above except that, of course, each of the actions described would take place in the opposite direction. Similarly, for a ball that was initially directed to the right and included a slice or for the case where the ball was initially directed to the left and hooked, the action would be generally similar to that described above except that at no time would the motor **740** be required to reverse its direction of rotation. Rather, the effect of the slice or the hook would be reflected as in increase in the rate of rotation.

It is to be noted that by applying a potential across the potentiometer **726** that is proportional to the distance in the Z direction at any given instant, the position of the spot on the screen **106** with regard to the X direction is controlled in accordance with the distance the shot would have traveled. For example, if a hundred yard shot was five yards off of line, it will be apparent that the just described circuitry will cause that spot to be indicated twice as far to the appropriate side of the theoretical straight shot line as would be the case for a two hundred yard shot that was also five yards off of line.

As mentioned above, both the potentiometer **726** and **728** provide inputs to their associated differential amplifiers that are proportional to the actual displacement of the projected spot on the screen **106** in their respective directions in order to insure proper positioning of the projected spot. Analysis will show that displacement in either the X or Y direction is equal to the length of a leg of a corresponding right triangle and thus, both the X and Y systems coupling the computer to the ball spot projector must compute the length of the corresponding right triangle leg. Since the manner of operation is the same in each instance and only the triangles involved differ, only the X system will be discussed.

Specifically, computed length of the leg in question is the actual distance from a vertical line passing through the center of the screen to the location of the projected spot measured at right angles to the line. The length of the leg will be equal to the product of the distance in the Z direction measured along the theoretical straight shot line and the tangent of the angle between the theoretical straight shot line (the other leg of the triangle) and the hypotenuse of the right triangle which extends from the observer's eye (at the tee) to the location of the projected spot on the screen measured in a plane defined by both the leg to be measured and the hypotenuse just mentioned.

Since this angle is defined in terms of the position of the projected spot on the screen which is dependent upon the position of the mirror **716** which in turn is reflected by the position of the wiper of the potentiometer **726**, the latter provides an indication of the angle when the system reaches its null point (no output from the differential amplifier **930**). Of course, at null the voltage sensed by the potentiometer **726** must equal the voltage on the S_x lead of the computer, and when such is the case, the voltage sensed by the potentiometer will be equal to a voltage corresponding to the product of the Z distance and a constant related to the angles. In order that the constant be equal to the tangent of the angle, the voltage representing S_x from the computer must be properly related to the voltage representing the Z distance.

If the projector is arranged so that the potentiometer **726** has its wiper at (1) its center point to project a spot to the center of the screen **106**, and (2) at one end to project a spot to a side edge of the screen **106**, then the required relation in terms of the output of the X circuit in volts per calculated foot in the X direction is

$$X \text{ gain} = \frac{(Z \text{ gain})\ (D)}{d} \qquad (13)$$

where:

Z gain is the output of the Z circuit in volts per calculated foot and which may be arbitrarily chosen,
D is the distance between the intended point of observation (generally the tee) and the screen, in feet, and
d is equal to one-half the horizontal dimension of the screen in feet.

The gain for the Y circuit may be calculated by the same equation by using the vertical dimension of the screen for *d* if the potentiometer **728** is arranged similarly to the potentiometer **726** but with respect to the top or bottom edge of the screen.

The foregoing discussion assumes that the cams **752** and **784** provide proper movement of the mirror in accordance with the computer inputs to their associated motors. If it be assumed that movement of the mirror **716** will be linear with respect to cam rise, the ball spot projector is arranged so that with both the potentiometers **726** and **728** having their wipers at the respective center points, the projected spot will be located at the center of the screen **106** and the wipers of the potentiometers will be at an end of the respective potentiometer when the projected spot is located at an associated edge of the screen **106**; and the screen defines a plane perpendicular to the light beam projected to the center of the screen **106**, then the cam rise may be calculated to insure proper movement of the projected spot according to the relation:

$$A = \frac{B}{C}\left(\frac{d}{\alpha}\right) \qquad (14)$$

where:

A is the cam rise in inches per degree of rotation,
B is
(1) in the case of the cam **784**, the distance between the axis defined by the shafts **774** and the axis of movement of the knife edge **798**, or
(2) in the case of the cam **752**, the distance between the rotational axis of the shaft **758** and the center of the cam follower **754**; both in inches,
C is the distance from the point of intersection of the axes defined by the shaft **758** and shafts **774** in inches to the center of the screen **106**,
d is
(1) one-half the vertical dimension of the screen **106** in inches for the Y system cam, or
(2) the horizontal dimension of the screen for the X system cam
α is the number of degrees from lock to lock of the potentiometer associated with the cam.

A cam configured according to Equation 14 will have a linear rise and it should be noted that it may be desirable in some instances to use cams having a non-linear rise to correct for deviations from the assumptions made above. For example, the changing of the position of the ball spot projector with regard to the center of the screen, the failure of a motion transmitting mechanism to move the mirror **716** linearly in accordance with cam rise, or parallax may require a non-linear configuration of either of the cams. In such cases, it is only necessary to include an appropriae corrective factor in Equation 14.

Referring to FIG. 4B, the manner in which the light source **712** of the ball spot projector is controlled will now be described. A switch **943** having a normally open contact **943***a* is adapted to be operated by the relay **560** (FIG. 4A). When the computer is actuated, the switch **943** is closed through the contact **943***a* to connect a positive source of potential to a series circuit comprised of a variable resistor **944** and a capacitor **945**, the latter also being connected to ground. The side of the capacitor **945** opposite ground is connected to a unijunction transistor **946** that is connected in series with a coil **947** of a reed relay between a variable power source and ground. The nature of the power source will be described in greater detail hereinafter.

Associated with the reed relay **947** is a set of normally open contacts **947***a* connected in series with a relay coil **948** across a source of power. The relay **948**, in turn, operates normally open contacts **948***a* which are placed in series with the light source **712** across a source of power.

From the foregoing, it will be apparent that when the computer is energized and the relay **560** closes the switch **943** through its normally open contact **943***a*, the capacitor **945** will begin to charge at a rate dependent upon the setting of the variable resistor **944**. At sometime in the charging of the capacitor **945**, the unijunction transistor **946** will be fired to energize the reed relay **947** which will close the relay **948** to provide power to the light source **712** so that a spot will be projected on the screen **106**.

When the computer is reset, the closing of the switch **943** through a normally closed contact **943***b* thereof will complete a circuit to discharge the capacitor **945** to reset the system for the next computer cycle.

The purpose of the just described circuit is to provide a delay between the energization of the computer and the initial portion of the response of the ball spot projector to the computer outputs before the spot of light is projected on the screen **106**. In this respect, it will be apparent that because of the nature of the data acquisition system, the computer will not provide outputs to the ball spot projector simultaneously with the initiation of the shot be the golfer. Rather, there will be a short delay before the computer can drive the ball spot projector. If the light source **712** were to be energized simultaneously with the initial operation of the computer and the ball spot projector, the simulated flight of the ball would begin at a low point on the screen for reasons to be described hereinafter, and the delay between the initiation of the ball spot projector and the initiation of the flight of the ball would be plainly visible to the golfer. Since a golfer would not expect the flight of the ball to begin, say, something on the order, of a second after he hit the ball, the failure to delay the projection of the spot until the ball spot projector is positioned to direct the spot at some point other than at the bottom of the screen would detract from the realism of the game.

Because the servo motors used for driving the ball spot projector require a finite time to drive the spot to the location required by the computer outputs, and since the time required will be dependent upon the response required by the computer outputs which will vary from shot to shot, it will be apparent that it is desirable to regulate the delay provided by the circuit elements **944**, **945** and **946** in accordance with some factor that has an influence on the rate of charge of the computer outputs.

Specifically, it has been found that the angle with regard to the azimuth will provide the desired relation. Thus, a resistor matrix (not illustrated) that is associated with the azimuth trigonometry matrix illustrated in FIGS. 5A and 5B is utilized to apply a positive voltage with the unijunction transistor **946** that varies directly proportional with the angle of azimuth. Thus, for a low azimuth angle, a relative low voltage would be provided to the circuit including elements **946** and **947** so that the unijunction transistors **946** would be fired when a much lower charge has accumulated on the capacitors **945** than

would be the case if the azimuth angle was relatively high and a higher positive voltage was applied to the circuit comprised of the elements **946** and **947**.

In other words, the arrangement is such that energization of the light source **712** will be delayed a longer time for a relatively greater azimuth angle than it would be for a relatively low azimuth angle.

CONTROLLING THE MAP SPOT PROJECTOR

The control system for the map spot projector is illustrated in FIG. 19. In order to minimize the number of parts required, the differential amplifiers **910** and **930**, the magnetic modulators **916** and **934** and the servo amplifier **918** and **936** are also used to control the X and Z motors of the map spot projector, although these elements could be duplicated for the map spot projector if desired.

In order to permit the above named elements to provide control of both the ball spot projector and the map spot projector, the switches **906**, **914**, **920**, **932**, **938** and **940** are provided and are operated simultaneously by a thermal relay **942** of conventional construction.

It will be recalled from the description of the bounce circuitry that a relay **520** is energized when the ball flight cycle is terminated. Since at this time there is no further need for movement of the projected ball spot, the energization of the relay **520** is utilized to cause the switching of the circuits from the ball spot projector to the map spot projector.

Specifically, normally open contacts **520***b* of the relay **520** are placed in series with a source of power and the thermal relay **942**. When the contacts **520***b* are closed by energization thereof the relay **520** at the termination of a ball flight cycle, the thermal relay **942** is energized to move the switches **906**, **914**, **920**, **922**, **932**, **938** and **940** from their normally closed contacts to their normally open contacts **906***b*, **914***b*, **920***b*, **922***b*, **932***b*, **938***b* and **940***b*, respectively, and to maintain the switches in this position for a period on the order of two seconds after which the thermal relay **942** will deenergize itself. The closing of the switch **906** through its normally open contact **906***b* switches the input of the differential amplifier **910** from the S_y lead to the $+S_z$ lead for purposes of running the Z motor of the map spot projector. As illustrated in FIG. 19, the Z motor of the map spot projector corresponds to the motor **780** of the ball spot projector and is numbered **780'** for clarity.

The closing of the switch **914** through its normally open contact **914***b* connects the wiper of the potentiometer **728'** associated with the motor **780'** as an input to the differential amplifier **910**. Thus, the differential amplifier **910** is provided with the requisite inputs for controlling the motor **780'** to cause it to reflect distance in the Z direction.

The closing of the switches **920** and **922** through their normally open contacts **920***b* and **922***b*, respectively, merely connects the output of the servo amplifier **918** to the Z motor **780'** of the map spot projector.

Thus, the motor **780'** will move the spot projected by the map spot projector in the Z direction in accordance with the voltage quantity representative of $+S_z$. It is to be noted that at the time when the Z motor **780'** is connected to the $+S_z$ lead of the circuit just described, the ball flight has terminated and the voltage quantity representative of S_z will be constant. Thus, the movement of the projected spot by the Z motor **780'** will not be slow to reflect the gradually increasing distance in the Z direction during the flight of the ball, but rather, will be rapid until the final Z distance is indicated.

It will be noted that the potentiometer **728'** associated with the Z motor **780'** has its rightmost end connected to a K volt source of power and its left end connected to a $10+K$ volt source of power. In other words, ten volts are applied across the potentiometer **728'**. The necessity for utilizing these potentials arises from the presence of the potentiometer **912** in the circuit with the differential amplifier **910**. Since the potentiometer **912** is not cut out of the circuit when the thermal relay **942** switches the system from the ball spot projector to the map spot projector, a provision must be made to offset the positive potential continually applied to the differential amplifier **910** by the potentiometer **912** and, accordingly, the value of K is selected to equal the potential sensed by the potentiometer **912**.

In this respect, in the exemplary embodiment the X and Y computer circuits are arranged to have an output gain of approximately 0.0178 volt per foot while the Z circuitry is arranged to have an output gain of about 0.01000 volt per foot. For a sixteen foot distance between the ground and the observer's eye, the setting of the potentiometer **912** would provide a potential to the differential amplifier **910** of about 0.28448 volt and K would be 0.28448 volt. The voltage drop of ten volts across the potentiometer **728'** therefore provides for indication of Z distance in a range of from zero to one thousand feet or about a range of three hundred and thirty-three yards which is significantly longer than the average golfer can hit a ball.

In the map spot projector the movement of the projected spot in the X direction is again provided by a motor that corresponds to the motor **740** in the ball spot projector and which is designated **740'** in the map spot projector. The X motor **740'** is ultimately operated by the magnetic modulator **934** and servo amplifier **936** which, it will be recalled, controls the motor **740** of the ball spot projector. Accordingly, it will be apparent that the input from the computer to the differential amplifier **930** need not be changed but rather, it is only necessary to provide the actual spot location input. This is achieved by means of the switch **932** which, when closed through its normally open contact **932***b* disconnects the potentiometer **726** as an input to the differential amplifier **930** and connects a potentiometer **726'** associated with the map spot projector X motor **740'** as an input to the differential amplifier **930**. It is also necessary to switch the output of the servo amplifier **936** from the motor **740** to the X motor **740'**. This is done by the closing of the switches **938** and **940** through their normally open contacts **938***b* and **940***b*, respectively.

After the two second period of operation of the thermal relay **942**, the map spot projector is disconnected from the computer and the ball spot projector is reconnected to the computer to be reset in readiness for a subsequent computer cycle.

RESETTING THE MAP SPOT AND BALL SPOT PROJECTORS

No separate provision is made for the resetting of the map spot projector **132**. This is due to the nature of the control system therefor described above which causes the map spot projector to indicate only the final displacement of the ball as opposed to the position of the ball at any point during the flight thereof. Thus, on a succeeding computer cycle, when the map spot projector is connected to the computer, it will automatically be moved to a new and proper position without the need for resetting.

On the other hand, it is necessary to reset the ball spot projector between computer cycles so that for each computer cycle, the initial position of the spot will be such that it must be moved upwardly relative to the scene on the screen **106**, as would be the case for a golfer viewing a shot on a natural golf course. Similarly, it is desirable to start the spot in line with the theoretical straight shot line, as the line encompasses the tee.

In accordance with the foregoing factors, means are provided for normally controlling the projector to return the projected spot to a point below the lower edge of the screen **106** and in line with the theoretical straight shot line.

It will be recalled from the foregoing description of the manner of resetting the computer that a relay **560** is energized when the computer cycle is initiated to control various switches that place various ones of the amplifier circuits in their corresponding input providing circuits. It will also be recalled that the relay **560** is deenergized when the computer cycle is terminated in order to reset the various integrating circuits in the computer. In order to cause resetting of the ball spot projector, as seen in FIG. 4A, a relay **950** is placed in parallel with the relay **560** and accordingly, it will be energized whenever the relay **560** is energized. The relay **950** operates the switches **260, 301, 303** and **486** illustrated in FIG. 4B, which may be ganged together.

As described previously, the switches **260, 301, 303** and **486** have normally closed contacts **260***b*, **301***b*, **303***b* and **486***b* and normally open contacts **260***a*, **301***a*, **303***a* and **486***a*. The outputs from the computer to the ball spot projector require that the switches **260, 301, 303** and **486** be closed through their normally open contacts and the energization of the relay **950** at the beginning of a computer cycle causes such to occur. At the termination of the computer cycle, the deenergization of the relay **950** causes the switches **960, 301, 303** and **486** to be closed through their normally closed contacts **260***b*, **301***b*, **303***b* and **486***b*.

Turning now to the circuit involving the contact **260***b*, it will be seen that the contact **260***b* is connected to the wiper of a potentiometer **952** that has one end connected to ground and the other end connected to a positive source of power. Thus, when the computer is reset, a positive potential will be placed on the S_y output to the ball spot projector. It will also be recalled from the discussion of the operation of the ball spot projector control circuitry that a positive input to the differential amplifier **910** will cause the lowering of the spot on the screen. Accordingly, the potentiometer **952** is suitably adjusted so that potential applied to the differential amplifier **910** will be sufficient to move the ball spot to the lower edge of the screen **106**.

Turning now to the contacts **301***b* and **303***b* (FIG. 4B), it will be seen that they are respectively connected through resistors to a negative source of power and a positive source of power, so that a negative voltage will be applied to the ball spot projector circuitry on the $-S_z$ lead and a positive potential will be applied to the ball spot projector on the $+S_z$ lead. The purpose of this construction is merely to provide potential to the potentiometers **726** and **728** (FIG. 19), so that the associated servo systems may respond after the computer is reset to bring the projected spot to the desired location.

The contact **486***b* is connected directly to ground. It will be recalled that a zero volt potential corresponds to a zero displacement in the X direction and accordingly, the 0 volt potential applied to the differential amplifier **930** on the S_x lead will ultimately cause the motor **740** to center the spot on the theoretical straight shot line.

It will be appreciated that the above described computing system, in addition to having utility in the playing of an indoor golf game, may also have substantial utility as an instructional device. For example, by utilizing a plurality of meters to monitor such quantities as the initial velocity of a shot, the angle with regard to the azimuth, the angle with regard to elevation and the output of the hook slice matrix, an observer can obtain all pertinent data relative to a shot made by a golfer. Additionally, a set of manual inputs utilizing means such as switches and variable voltage dividers having operators marked with suitable indicia or scales corresponding to the meters and a set of switch contacts for switching the computer inputs from the automatic data acquisition system to the manual inputs may be incorporated in the system. By operating the manual inputs in accordance with the information obtained from meters for an actual shot, a visual representation of the shot may be "replayed" any number of times on the screen so that an instructor may point out the effect on the trajectory of the ball of a given deficiency in a golfer's swing. Such a correlation of cause and effect is an extremely useful tool in instructing many golfers.

We claim:

1. In an indoor golf game having a means for computing the theoretical free flight trajectory of a golf ball struck from a tee toward a target, the improvement comprising: first means for determining when the flight of a ball is initiated at said tee by sensing one characteristic of the initiation of the flight of a golf ball; second means for determining when the flight of a ball is initiated at said tee by sensing a second characteristic different from said one characteristic of the initiation of the flight of a golf ball; and means responsive to said first and second determining means when both said one and said second characteristics are sensed for actuating said computing means.

2. The invention of claim **1** wherein said first determining means includes a light sensitive element, said second determining means includes a vibration sensitive element, and said last-named means includes an AND gate.

3. The invention of claim **2** wherein said last-named means further includes switch means for providing electrical power to said computing means, said switch means being connected to said AND gate to be actuated thereby.

4. In a golf game having a means for computing the theoretical free flight trajectory of a golf ball struck from a tee point toward a target and a means including a first light source for sensing the initiation of the flight of a golf ball from said tee point for actuating said computing means, the improvement comprising: means including a second light source distinguishable by a golfer from said first light source and focused on said tee point for indicating to a golfer when said computing means is not in readiness to compute the trajectory of a golf ball; means responsive to the actuation of said computing means for actuating said second light source; and means responsive to the completion of computation by said computing means for deactuating said second light source and for actuating said first light source.

5. In a golf game having a tee from which a ball may be struck, a screen adjacent the tee for receiving indicia representative of a scene on a golf course, and a means for projecting a spot of light on the screen to simulate the flight of a golf ball, the improvement comprising: data acquisition means adjacent said tee for providing information relative to the flight of a golf ball struck from said tee; computation means for receiving said information and for continuously providing a first signal representative of the theoretical distance of the ball above the ground at the corresponding point in time; means responsive to said projecting means for continuously providing a second signal representative of the theoretical distance of the spot of light projected thereby above the ground at the corresponding point in time; and means for comparing said signals to determine any difference therebetween and for operating said projecting means in accordance with the difference between said signals.

6. The invention of claim **5** wherein said computation means comprises an electrical analogue computer having a circuit for providing said first signal, said second signal providing means comprises a potentiometer mechanically linked to said projecting means, and said comparing and operating means comprises a differential amplifier receiving said signals.

7. The invention of claim **6** wherein said computation means further includes a circuit for continuously generating third and fourth equal but opposite signals representative of the theoretical distance between said tee and the ball throughout the flight of the latter at the corresponding point in time; said second signal being taken from the wiper of said potentiometer and said third and fourth

signals being applied to opposite ends thereof; and means providing a fifth, constant bias signal to said differential amplifier.

8. The invention of claim 5 wherein said computation means further includes electrical means operative after the initiation of the flight of a ball from said tee for sensing when the theoretical distance of the ball above the ground is substantially equal to zero, electrical means including at least a portion of said data acquisition means operative in response to said sensing means for changing the magnitude of said first signal to reflect an initial increase in the theoretical distance of the ball above the ground, and electrical means responsive to said sensing means for providing a signal to oppose said first signal at an increasing rate, whereby said first signal is continuously changed to reflect continuously the distance of a bouncing ball above the ground and said projecting means will move said spot of light to simulate a bouncing ball.

9. In a golf game having a tee from which a ball may be struck and a screen adjacent the tee for receiving indicia representative of a scene on a golf course, the improvement comprising: means for projecting a spot of light on said screen to simulate the flight of a ball struck from said tee, said projecting means having a single motor for causing said spot to be moved in a direction to represent a point in the flight of the ball relative to the azimuth at the corresponding point in time; data acquisition means including first means for determining the initial direction of the ball relative to the azimuth and second means for determining the spin on a ball that affects its direction with relation to the azimuth; computation means responsive to both of said determining means for continuously providing a single signal representative of the deviation of the ball with regard to the azimuth, due to initial direction and spin, from a predetermined line at a corresponding point in time; and means for providing said single signal to said single motor.

10. The invention of claim 9 wherein said computation means includes means for determining the initial velocity of the ball with relation to said line due to initial direction of the ball with respect thereto to provide a signal representative thereof and responsive to said first means, means for determining the velocity of the ball with relation to said line due to spin on the ball to provide a signal representative thereof and responsive to said second means, and means for summing and integrating said signals to provide said single signal.

11. In a golf game having a tee from which a ball may be struck, a screen adjacent the tee for receiving indicia representative of a scene on a golf course, a projector for projecting a spot of light on the screen to simulate the flight of a golf ball, and means for acquiring information relative to the flight of a ball struck from said tee and for providing an output whose magnitude is representative of the theoretical distance of the ball above the ground to said projector to drive the same during a ball flight cycle, the improvement comprising: electrical means operative at a predetermined time during said cycle for cyclically varying the magnitude of said output to thereby cyclically vary the position of the spot on said screen to simulate the bouncing of a ball.

12. The invention of claim 11 wherein said electrical means comprise means actuated after the flight of a ball from said tee has been initiated for sensing when the magnitude of said output is representative of a theoretical distance between the ball and the ground that is eual to zero, first means for changing the magnitude of said output to reflect an increase in said theoretical distance as a function of said information acquired by said acquiring and providing means, and second means for changing the magnitude of said output in a manner opposing the change caused by said first means.

13. The invention of claim 12 wherein said sensing means comprise means for providing a signal of constant magnitude having a predetermined relation to the magnitude of said output when the latter represents said theoretical distance of zero and means for comparing said output and said signal for actuating said first and second means when the magnitude of said output represents said theoretical distance of zero.

14. The invention of claim 12 wherein said acquiring and providing means includes a means for determining the angle of elevation and the instantaneous velocity of a ball struck from said tee and said first changing means includes means for providing a signal that is a function of said angle and instantaneous velocity and means for summing said signal with said output.

15. The invention of claim 12 wherein said second changing means comprises a capacitor in a charging circuit arranged to oppose at an increasing rate the change caused by said first changing means, and means responsive to said sensing means for discharging said capacitor whenever the magnitude of said output represents said theoretical distance of zero.

16. The invention of claim 11 further including means responsive to said acquiring and providing means and to said electrical means for rendering said electrical means inoperative after a time period dependent upon the nature of the information acquired by said acquiring and providing means.

17. The invention of claim 16 wherein said acquiring and providing means includes means for determining the angle of elevation of a ball struck from said tee; and said rendering means comprises a capacitor in a variable charging circuit that is responsive to said determining means, said circuit comprising means for charging said capacitor at a rate proportional to said angle of elevation, and means for sensing when the charge on said capacitor exceeds a predetermined level and means responsive to said sensing means for deenergizing said electrical means.

18. The invention of claim 17 further including means for precluding operation of said deenergizing means whenever the magnitude of said output is not representative of said theoretical distance of zero.

19. The invention of claim 11 further including means for rendering said electrical means inoperative at a predetermined time and means for precluding operation of said rendering means whenever the magnitude of said output is not representative of said theoretical distance of zero.

20. A golf game computer comprising:

(a) means for determining the initial total velocity of a ball struck from a tee;

(b) means for determining the angle of elevation of a ball struck from a tee;

(c) means for determining the angle with relation to the azimuth of a ball struck from a tee;

(d) means for determining the spin on a golf ball struck from a tee;

(e) means responsive to said initial velocity determining means for decaying the initial velocity in accordance with a predetermined relation to reflect the effect of drag and to provide a signal representative of the total instantaneous velocity of a ball struck from a tee at any corresponding point in the time of flight thereof;

(f) means responsive to said decaying means and both of said angle determining means for continuously resolving said total instantaneous velocity signal into three signals representative of the instantaneous velocity in three mutually perpendicular directions;

(g) means responsive to said spin determining means for providing a fourth signal representative of the instantaneous velocity in one of said directions due to spin;

(h) means for providing a fifth signal representative of the instantaneous velocity in another of said directions due to lift and gravity;

(i) first means for summing and integrating one of said three signals and said fourth signal to provide a sixth signal representative of the instantaneous displacement of a ball struck from said tee in said one direction;

(j) second means for summing and integrating another of said three signals and said fifth signal to provide a seventh signal representative of the instantaneous displacement of a ball struck from said tee in said another direction; and

(k) means for integrating the other of said three signals to provide an eighth signal representative of the instantaneous displacement of a ball struck from a tee in the other of said three directions.

21. The invention of claim **20** further including means for cyclically varying said seventh signal to represent the displacement of a bouncing ball and means operative at a predetermined point of operation of said computer for energizing said varying means and deenergizing said fifth signal providing means.

22. The invention of claim **20** wherein said initial velocity determining means includes a vibration sensitive element and a light sensitive element for sensing when the flight of a ball is initiated at a tee, and means responsive to both of said elements for initiating operation of said computer.

23. The invention of claim **20** wherein said determining means comprise a plurality of electrical circuits, each for sensing information relative to the path of a ball struck from a tee, and means responsive to the actuation of one of said circuits by a ball for thereafter precluding actuation of the others of said circuits.

24. The invention of claim **20** further including a tee, a source of light focused on said tee, means responsive to the actuation of said computer for energizing said source of light, and means responsive to the completion of computation by said computer for deenergizing said source of light.

25. In a golf game wherein a golfer strikes a ball from a tee, a computer comprising:

(a) means for determining the initial velocity of a ball struck from said tee and for providing a signal having a magnitude proportional thereto;

(b) means for receiving said signal and for changing the magnitude of said signal in accordance with a predetermined relation to reflect a decrease in the initial velocity thereby providing a signal having a magnitude proportional to the instantaneous velocity of the ball at a corresponding point in the time of flight thereof;

(c) means for receiving said signal proportional to instantaneous velocity and for integrating the same to provide a signal proportional to the instantaneous displacement of the ball from said tee at a corresponding point in the time of flight thereof; and

(d) means for utilizing said signal proportional to instantaneous displacement to provide information relative to the flight of the ball to said golfer.

26. The invention of claim **25** wherein said initial velocity determining means comprises a binary counter, a clock means for stepping said binary counter, means for causing said clock means to step said binary counter when a ball is at a first point in the flight thereof, means for precluding said clock means from stepping said binary counter when the ball is at a second, subsequent point in its flight, said second point being spaced from said first point a predetermined distance, and means for converting the count held by said binary counter to an electrical signal having a magnitude proportional to the velocity of the ball as it passed from said first point to said second point.

27. The invention of claim **26** wherein said binary counter has n bits and said converting means comprises a matrix having n resistive legs, each leg being controlled by the corresponding bit of said binary counter in accordance with the condition thereof and each leg having a resistive value substantially equal to $r_n 2^{n-B}$ where:

n is the number of bits in the binary counter

B is the number of the bit by which the leg is controlled, and

r_n is the resistive value of the leg controlled by the nth bit of the binary counter

whereby a time quantity is converted to an electrical signal having a magnitude directly proportional to the velocity of the ball.

28. The invention of claim **25** wherein said receiving and changing means comprise a summing circuit having an input for receiving said signal proportional to initial velocity and having an output for providing said signal proportional to instantaneous velocity, means having an input connected to said output for squaring the magnitude of the signal received therefrom; and providing the same on an output, an inverting circuit having an input connected to said squaring means output and an output connected to an integrating circuit having an output connected as a second input to said summing circuit, and resistive means connected across said inverting circuit.

29. The invention of claim **28** wherein said resistive means comprise two resistive legs connected in parallel across said inverting circuit and means for precluding one of said legs from conducting when the voltage across said inverting circuit is less than a predetermined value.

30. A golf game comprising a target including a screen adapted to receive indicia representative of a scene on a golf course, a tee spaced from said target from which a ball may be driven toward said target, means associated with said tee and said target for determining the angle of elevation and the velocity of a ball driven from said tee to said target, means responsive to said determining means for computing the instantaneous velocity of said ball in a vertical direction and for providing a first electrical signal whose voltage is proportional to the instantaneous velocity of the ball in said direction due to initial velocity and drag, means for providing a second electrical signal whose voltage is proportional to the force of gravity acting on the ball, an integrating circuit connected to receive said second electrical signal and to provide a third electrical signal whose voltage is proportional to the instantaneous velocity of the ball due to gravity, and means including an integrating circuit for receiving, summing and integrating said first and third electrical signals to provide a fourth electrical signal whose voltage is proportional to the instantaneous displacement of the ball in said direction.

31. The invention of claim **30** further including means responsive to said determining means for providing a fifth electrical signal whose voltage is proportional to the force acting on the ball due to lift in said direction, said integrating circuit being connected to sum and integrate said second and fifth signals to cause said third signal voltage to be proportional to the combined effects of lift and gravity.

32. The invention of claim **30** wherein said second signal providing means comprises a voltage divider.

33. The invention of claim **30** further including means operative after the initiation of the flight of a ball from said tee for receiving said fourth signal and for sensing when the voltage thereof represents a displacement of zero in said direction, and means responsive to said sensing means for cyclically varying the voltage of said fourth signal to cause said fourth signal voltage to be proportional to the instantanous displacement of a bouncing ball.

34. The invention of claim **33** wherein said cyclical varying means comprise means for disabling said second signal providing means and means cyclically operative in response to said sensing means each time said sensing means senses when said fourth signal voltage represents a displacement of zero in said direction for providing

to said means including an integrating circuit, in place of said second signal, a signal whose voltage is changed oppositely of the change of the voltage of said first signal.

35. A golf game comprising a tee from which a ball may be driven along an intended line of flight, means for determining the initial velocity of a ball struck from said tee, means responsive to said determining means for computing the instantaneous velocity of a ball at a corresponding point in time in the flight thereof; means for detecting the angle of a ball hit from said tee with regard to the azimuth, means responsive to said computing means and to said detecting means for providing a first electrical signal whose magnitude is proportional to the instantaneous velocity of a ball hit from said tee in a horizontal direction transverse to said intended line of flight, and an integrating circuit connected to said providing means for integrating said signal and providing a second electrical signal whose magnitude is proportional to the instantaneous displacement of the ball measured in said horizontal direction.

36. The invention of claim 35 further including means for detecting the spin on a golf ball hit from said tee, means responsive to said spin detecting means for computing the instantaneous velocity of said ball in said horizontal direction and providing a third electrical signal whose magnitude is proportional thereto; said integrating circuit further comprising means for summing said first and third electrical signals.

37. The invention of claim 36 wherein said electrical means comprises a resistive matrix having a plurality of electrically spaced tap points, an integrating circuit having an input and an output, said output providing said third signal, and means responsive to said spin detecting means for connecting said input to a selected one of said tap points.

38. A golf game comprising: means for acquiring data relative to the trajectory of a ball hit from a tee; means responsive to said data acquiring means for computing the distance from the tee the ball would travel in flight; a screen adapted to receive a perspective scene of at least a portion of a golf hole; means for indicating the computed final, at rest, position of the ball on the screen and on any scene thereon; and means for controlling said indicating means in response to a comparison of the distance computed by said computing means and a factor representing the height of a viewer's eyes above the ground.

39. The golf game of claim 38 wherein said screen includes a reference point located between the top and the bottom of the screen and said controlling means controls said indicating means to indicate said final, at rest position at a point below said reference point a distance approximately directly proportional to the product of the distance between said scene and a viewer's eyes and the ratio of said factor to said computed distance.

40. A golf game comprising: means for acquiring data relative to the trajectory of a ball hit from a tee; means responsive to said data acquiring means for computing the distance from the tee the ball would travel in flight; a scene of at least a portion of a golf hole; means for indicating the computed final at rest position of the ball on the scene; positioning means for said indicating means including motor means for moving said indicating means; and control means for said motor means including means for comparing said computed distance and a factor representing the height of an observation point above the ground.

41. The golf game of claim 40 wherein said comparing means includes a potentiometer having a wiper mechanically linked with said motor means and adapted to provide a first signal, said computing means being operative to apply a second signal proportional to said computed distance across said potentiometer; means providing a third signal proportional to said factor; and means for energizing said motor means until said first and third signals balance.

42. In a golf game, the combination of: a tee from which a ball may be hit; a target spaced from said tee and adapted to receive a scene representative of at least a portion of the terrain of a hole on a golf course; data acquisition means for providing data relative to the initial characteristics of the flight of a ball hit from said tee; computing means responsive to said data acquisition means for utilizing said data to compute the trajectory of a ball hit from the tee including an instantaneous characteristic related to the distance of the ball from the tee and for providing a signal representative thereof; spot projecting means responsive to said computing means for projecting a spot on said target to simulate the flight of a ball relative to the terrain depicted by a scene thereon; means providing a signal representing the height of an observation point above the terrain; and means responsive to both said distance related signal and said height signal for controlling said spot projecting means.

43. The golf game of claim 42 wherein said height signal providing means provides a signal of constant magnitude.

44. In a golf game, the combination comprising: a tee from which a ball may be hit; data acquisition means for acquiring data relative to the trajectory of a ball hit from said tee; means responsive to said data acquisition means for utilizing said data to compute at least a characteristic of the trajectory of a ball hit from said tee related to the height of a ball in flight; indicator means responsive to said computing means for indicating said characteristic to an observer; and means operative near the terminal portion of the computed trajectory for controlling said indicator means to indicate a bouncing ball.

45. The golf game of claim 44 further including means for sensing when said computed characteristic results in the trajectory of the ball intercepting the ground and for initiating operation of said controlling means.

46. The golf game of claim 45 wherein said computing means provides a signal variable according to said computed characteristic, and said sensing means includes means for providing a reference signal related to ground level, and means for comparing said characteristic signal and said reference signal.

47. The golf game of claim 46 wherein said reference signal is constant.

48. In a golf game, the combination comprising: a tee from which the ball may be hit; data acquisition means for acquiring data relative to the trajectory of a ball hit from said tee; means responsive to said data acquisition means for utilizing said data to compute at least a characteristic of the trajectory of a ball hit from said tee relating to the height of a ball in flight; indicator means responsive to said computing means for indicating said characteristic to an observer; and means operative when a ball would contact the ground for causing said indicator means to indicate a bouncing ball.

49. The golf game of claim 48 wherein said last-named means includes means for generating a control signal whose magnitude is proportional to the instantaneous height of a bouncing ball above the ground and which is dependent upon a characteristic of the trajectory of a ball hit from the tee.

50. In a golf game, the combination of: computing means for computing the trajectory of a golf ball in flight; display means responsive to said computing means for displaying the computed trajectory of a golf ball in flight; and bounce means for causing said display means to display the trajectory of a bouncing ball.

51. The golf game of claim 50 further including means for detecting the initial angle of elevation of a golf ball and wherein said bounce means includes means responsive to said elevation angle detecting means for causing said display means to display a rolling ball when a low initial angle of elevation has been detected.

52. The golf game of claim 50 further including means for detecting the initial angle of elevation of a golf ball and wherein said bounce means includes means responsive to said elevation angle detecting means for causing said display means to display a bouncing ball when an intermediate initial angle of elevation has been detected.

53. The golf game of claim 52 wherein the height of the displayed bounce is directly proportional to the magnitude of the detected initial angle of elevation.

54. The golf game of claim 50 further including means for detecting the initial angle of elevation of a golf ball and wherein said bounce means includes means responsive to said elevation angle detecting means for causing said display means to display little or no bounce of a ball when a high initial angle of elevation has been detected.

References Cited

UNITED STATES PATENTS

2,581,738	1/1952	Williams	273—181
2,783,999	3/1957	Simuian	273—185 XR
2,954,232	9/1960	Aver	273—181 XR
3,300,218	1/1967	Speiser	273—185

FOREIGN PATENTS

855,529	12/1960	Great Britain.

CHARLES A. RUEHL, Primary Examiner

U.S. Cl. X.R.

273—183, 181